

EC 后向离心风机 Φ225

EC Centrifugal Fan

Backward Curved Φ225

版本号/Version number: V1.0

2025-07-22

额定数据 Nominal data

型号 Type	EC072/35E3G01-B225/49P1-01-Z	
相数 Phase	1~	
额定电压 Rated voltage	VAC	230
电压范围 Rated voltage range	VAC	200 ~ 277
频率 Frequency	Hz	50/60
转速 Speed (rpm)	min^{-1}	2850
功率 Power consumption	W	170
电流 Current	A	1.3
最低环境温度 Min. ambient temperature	℃	-25
最高环境温度 Max. ambient temperature	℃	60

ErP 能效数据 ErP Energy efficiency data

		实际 Actual	规定 2015 Req. 2015
整体效率η_{es} Overall efficiency	%	51.2	43.4
测量类别 Measurement category		A	
效率类别 Efficiency category		静态 Static	
效率等级 N Efficiency grade N		69.8	62
转速调节 Variable speed drive		是 Yes	

*注：此文件仅供选型参考，如您有任何疑问或需要进一步的技术支持，请随时与我们联系。

Please note that this document is intended solely for selection reference. Should you have any inquiries or require additional technical support, do not hesitate to reach out to us.

特性曲线及数据 Characteristic curve and data

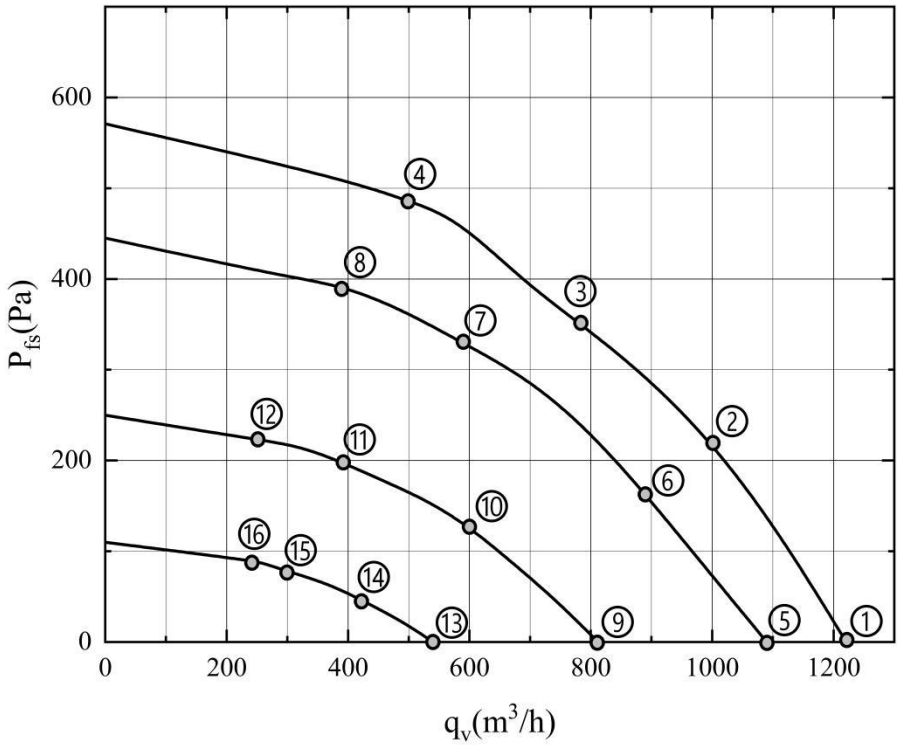

	电压	频率	转速	功率	电流	噪声	风量	静压	风量
	Rated voltage	Frequency	Speed	Power	Current	Noise	Air flow	Static pressure	Air flow
	U(V)	f(Hz)	n(r/min)	P_{ed}(W)	I(A)	L_p(dB(A))	q_v(m^3/h)	p_{fs}(Pa)	q_v(cfm)
1	230	50	2900	134	1.0	73	1220	0	718
2	230	50	2900	170	1.3	69	1000	220	589
3	230	50	2850	170	1.3	65	780	350	459
4	230	50	2900	160	1.2	70	500	490	294
5	230	50	2600	95	0.7	70	1090	0	642
6	230	50	2600	120	0.9	65	890	160	524
7	230	50	2600	126	1.0	64	590	330	347
8	230	50	2600	110	0.8	68	390	390	230
9	230	50	1950	43	0.4	63	810	0	477
10	230	50	1950	55	0.5	59	600	130	353
11	230	50	1950	52	0.4	58	390	200	230
12	230	50	1950	46	0.4	59	250	220	147
13	230	50	1290	16	0.2	57	540	0	318
14	230	50	1290	19	0.2	55	420	50	247
15	230	50	1290	19	0.2	53	300	80	177
16	230	50	1290	18	0.2	53	240	90	141

技术说明 Technical description

净重 Net weight		2.6kg	
毛重 Gross weight		/	
包装尺寸 Package size		/	
叶轮型号 Impeller model		225	
电机型号 Motor model		072	
转子表面 Rotor surface		黑色喷塑 Painted black	
叶轮材料 Impeller material		PA 塑料 PA Plastic	
支架材料 Support bracket material		PA 塑料 PA Plastic	
叶片数量 Number of blades		7	
旋转方向 Direction of rotation		CW（从转子端看）Viewed toward rotor	
防护等级 Degree of protection		IP54	
安装方式 Installation type		轴水平安装或转子向下安装 Shaft horizontal or rotor downward installation	
绝缘等级 Insulation class		F	
储存环境温度 Storage temperature		-40℃～+75℃	
运行模式 Mode		S1	
动平衡 Dynamic balance		G4.0	
轴承 Bearing		滚珠球轴承 Ball bearing	
风机寿命 Life time	小时 Hour	40,000	额定电压，风机全速运转，40℃环境 At nominal voltage, running at full speed, environment temperature 40℃
电磁兼容 EMC		工业级 Industrial	
启动电压 Starting voltage		1.5V	
电源线对地耐电压 Power line to ground withstand voltage		DC2100V/1min	
控制特点 Control characteristics		0-10 VDC / PWM 控制输入端 0-10 VDC / PWM speed regulation	
		输出端 10VDC，最大 3.5mA Output terminal +10VDC, 3.5mA max	
		集成的 PID 控制器 Integrated PID controller	
		电机软件过热保护 Motor software overheat protection	
		软启动 Soft Start	
		低电压/相故障检测 Under volt/Phase failure protection	

产品图纸　Product drawing

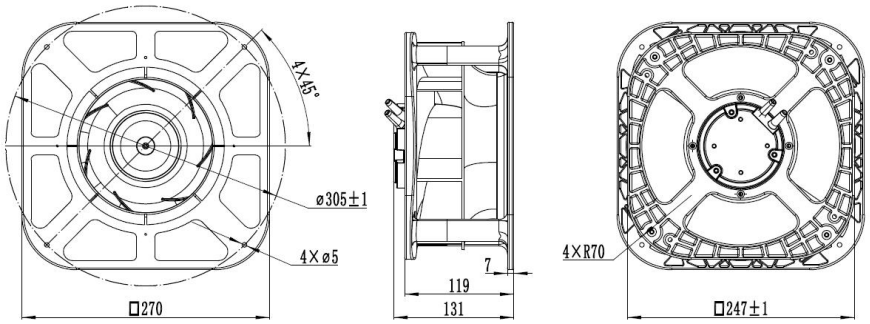

线路图 Connection diagram

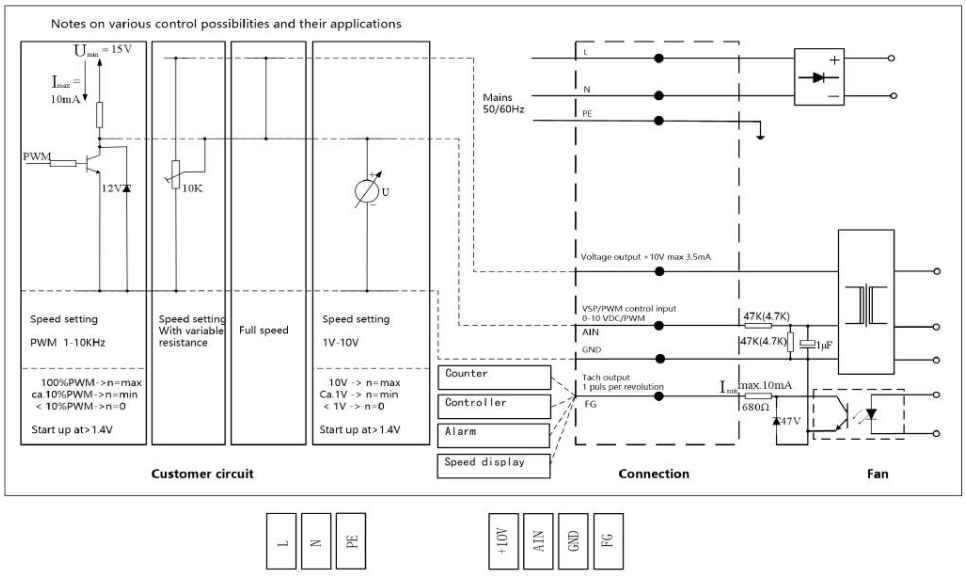

Terminal	NO.	Connection	Function
KL1	1	L	电源相线，电压范围见铭牌 Power supply phase wire, voltage range, show on the nameplate
	2	N	电源中性线，电压范围见铭牌 Power supply neutral wire, voltage range, show on the nameplate
	3	PE	保护接地 Protective earth
KL2	1	+10V/max. 3.5mA	电压输出，给外部设备提供电源 Voltage output, power supply for ext. device
	2	AIN(0-10V/ PWM)	控制0-10V或PWM输入，内部阻抗为10K Control input 0-10V or PWM, internal impedance 10K
	3	GND	控制接口部分参考地 Reference ground for control interface
	4	FG	输出：1脉冲/每转 Tach output: 1 pulse/revolution