NO.	4D315/125-M180/75 A0-2025	A0

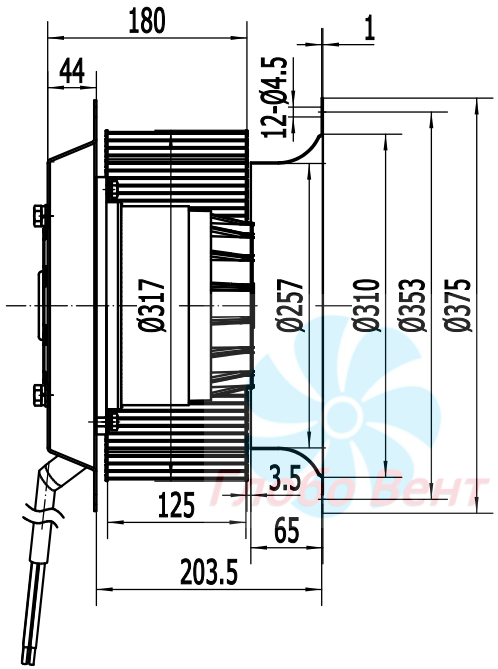

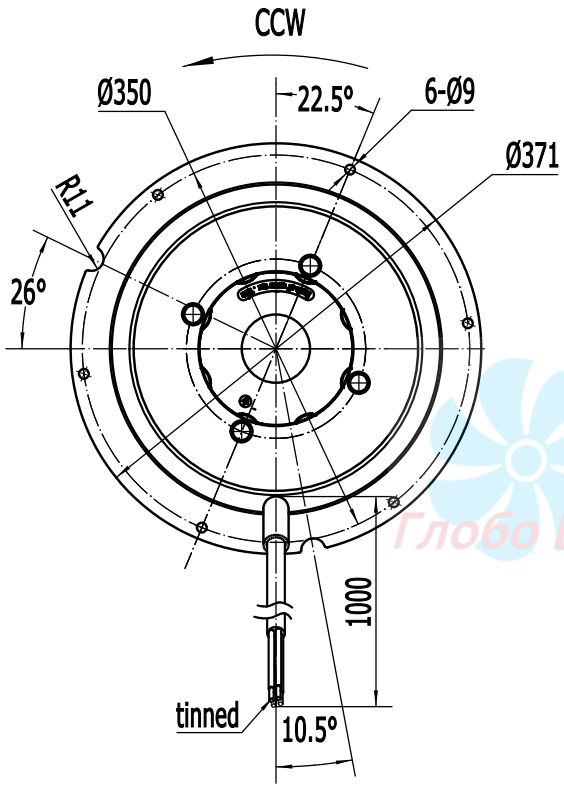

SPECIFICATION

UNIT	Forward Centrifugal Fans(AC)
MOTOR	Three phase motor
TYPE	LXFF4D315/125-M180/75-AB02
VOLTAGE(V)	230/400
FREQUENCY(Hz)	50
CURRENT(A)	6.4/3.7
INPUT POWER(W)	2180
SPEED(r/min)	1370
NOISE(dBA)	87
CAPACITOR(μ F/450V)	/
ROTATION	CCW,looking into the end-shield
MOTOR PROTECTION	Thermocontact 150±5℃
PROTECTOR RESET TEMPERATURE	Reset temperature 90-130℃
INSULATION CLASS	F
TEMPERATURE RISE	95K max
PROTECTION CLASS	IP44
OPERATING TYPE	S1
MOUNTING TYPE	Side or horizontal rotor installation facing downwards
AMBIENT TEMPERATURE	-30°C~+60°C
PSTORAGING TEMPERATURE AND HUMIDITY	-40℃~80℃、5%~95%RH
BEARINGS	6204ZZ Ball bearings
ELECTRICAL CONNECTION	Lead wire UL1330 4G 16AWG+2G 20AWGmm²,Length 1000mm
IMPELLER MATERIAL	Metal
APPROVALS	CE
UNIT/BOX	1
NET WEIGHT/GROSS WEIGHT	20.7/22.5kg
PACKING	41.4×41.4×29.2cm

LABEL:

WEIGUANG® LXFF4D315/125-M180/75-AB02
△230V 50Hz 6.4A 1000/2180W 1370r/min
Y400V 50Hz 3.7A 1000/2180W 1370r/min
CL.F IP44 XX/XX

WIRING DIAGRAM:

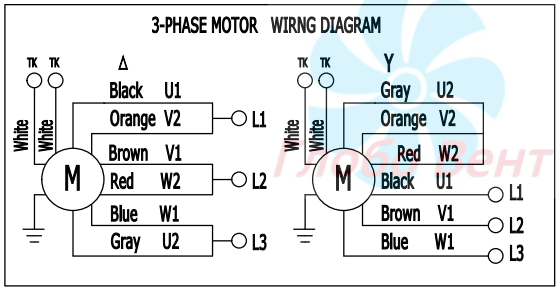

FLOW RATE CURVE:

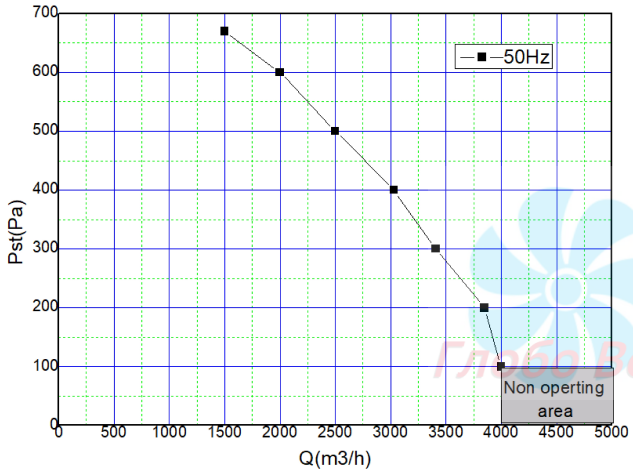

					SIGN	DATE	
				DRN.BY	Jinxuan TAO	2025.3.14	LXFF4D315/125-M180/75-AB02
				CHD.BY			
				ENG.BY			PROJECTION A4
REV.	DESCRIPTION	APPROVED	DATE	APP.BY			SCALE:
							頁码 SHEET: 1 of 1