NO.	4D280/112-M168/50 A0-2025	A0

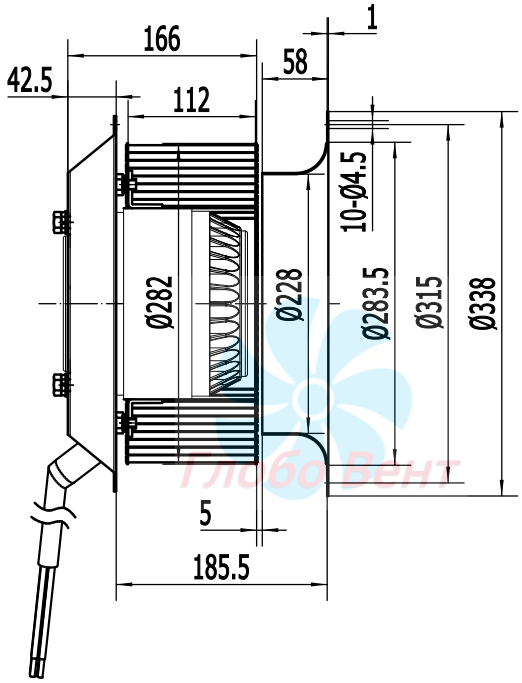

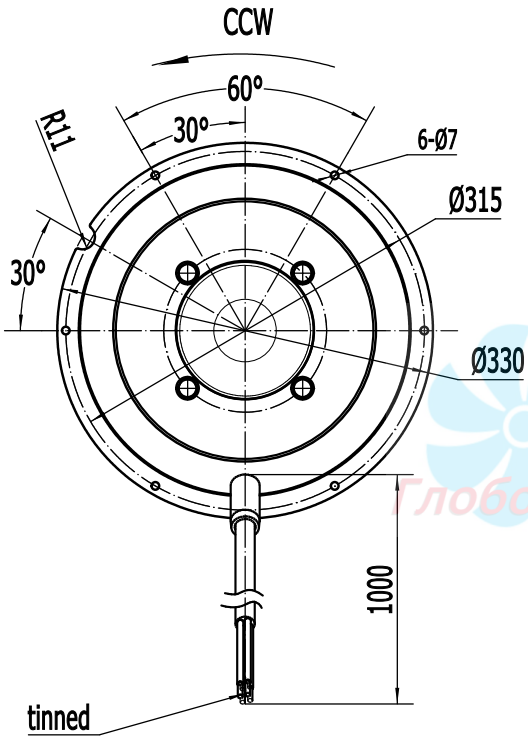

SPECIFICATION

UNIT	Forward Centrifugal Fans(AC)
MOTOR	Three phase motor
TYPE	LXFF4D280/112-M168/50-AB02
VOLTAGE(V)	230/400
FREQUENCY(Hz)	50
CURRENT(A)	4.51/2.54
INPUT POWER(W)	1400
SPEED(r/min)	1350
NOISE(dBA)	85
CAPACITOR(μF/450V)	/
ROTATION	CCW,looking into the end-shield
MOTOR PROTECTION	Thermocontact 150±5℃
PROTECTOR RESET TEMPERATURE	Reset temperature 90-130℃
INSULATION CLASS	F
TEMPERATURE RISE	95K max
PROTECTION CLASS	IP44
OPERATING TYPE	S1
MOUNTING TYPE	Side or horizontal rotor installation facing downwards
AMBIENT TEMPERATURE	-30°C~+60°C
PSTORAGING TEMPERATURE AND HUMIDITY	-40℃~80℃、5%~95%RH
BEARINGS	6004ZZ Ball bearings
ELECTRICAL CONNECTION	Lead wire UL1330 6*16AWG+18AWG+2*20AWG,Length 1000mm
IMPELLER MATERIAL	Metal
APPROVALS	CE
UNIT/BOX	1
NET WEIGHT/GROSS WEIGHT	15.1/15.9kg
PACKING	37.4×37.4×26.7cm

LABEL:

WEIGUANG® LXFF4D280/112-M168/50-AB02
Δ230V 50Hz 4.51A 680/1400W 1350r/min
Y400V 50Hz 2.54A 680/1400W 1350r/min
CL.F IP44 XX/XX

FLOW RATE CURVE:

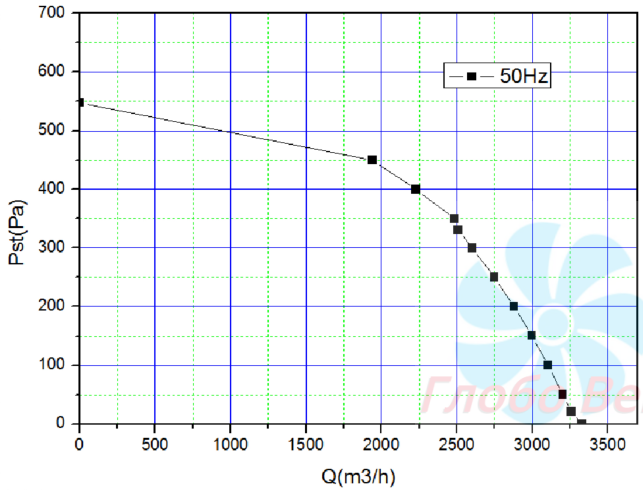

WIRING DIAGRAM:

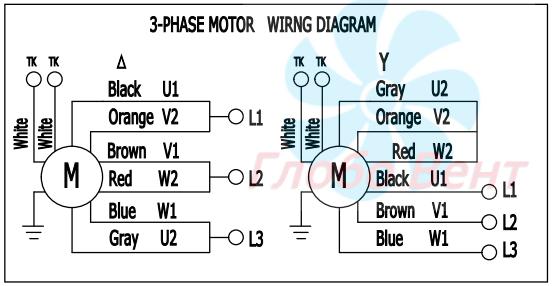

					SIGN	DATE	
				DRN.BY	Jinxuan TAO	2025.3.14	LXFF4D280/112-M168/50-AB02
				CHD.BY			
				ENG.BY			PROJECTION A4
REV.	DESCRIPTION	APPROVED	DATE	APP.BY			SCALE:
							页码 SHEET: 1 of 1