NO.	4D225/90-M137/35 A0-2025	A0

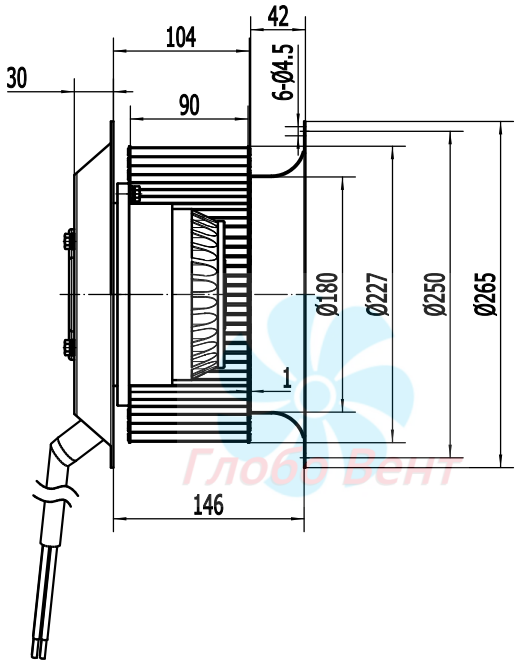

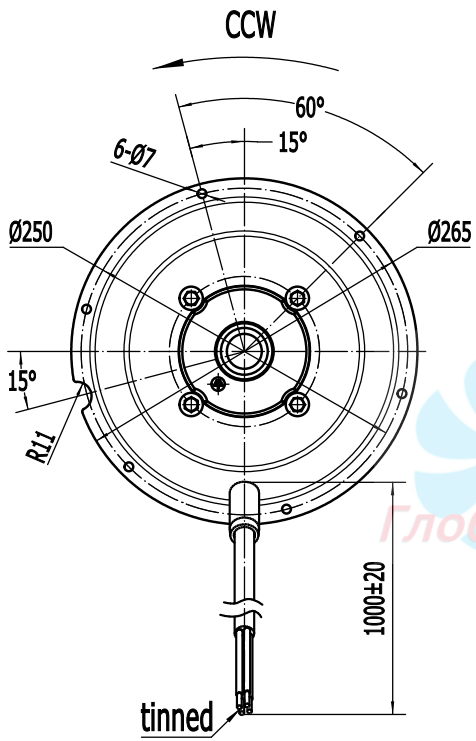

SPECIFICATION

UNIT	Forward Centrifugal Fans(AC)
MOTOR	Three phase motor
TYPE	LXFF4D225/90-M137/35-AB02
VOLTAGE(V)	230/400
FREQUENCY(Hz)	50
CURRENT(A)	1.50/0.90
INPUT POWER(W)	470
SPEED(r/min)	1340
NOISE(dBA)	78
CAPACITOR(μ F/450V)	/
ROTATION	CCW,looking into the end-shield
MOTOR PROTECTION	Thermocontact 150±5℃
PROTECTOR RESET TEMPERATURE	Reset temperature 90-130℃
INSULATION CLASS	F
TEMPERATURE RISE	95K max
PROTECTION CLASS	IP44
OPERATING TYPE	S1
MOUNTING TYPE	Side or horizontal rotor installation facing downwards
AMBIENT TEMPERATURE	-30°C~+60°C
PSTORAGING TEMPERATURE AND HUMIDITY	-40℃~80℃、5%~95%RH
BEARINGS	6002ZZ Ball bearings
ELECTRICAL CONNECTION	Lead wire UL1330 7G 0.75mm²+2G 0.30mm²,Length 1000mm
IMPELLER MATERIAL	Metal
APPROVALS	CE
UNIT/BOX	1
NET WEIGHT/GROSS WEIGHT	7.3/8.0kg
PACKING	29×29×22cm

LABEL:

WEIGUANG® LXFF4D225/90-M137/35-AB02
Δ230V 50Hz 1.50A 230/470W 1340r/min
Y400V 50Hz 0.90A 230/470W 1340r/min
CL.F IP44 XX/XX
CE

WIRING DIAGRAM:

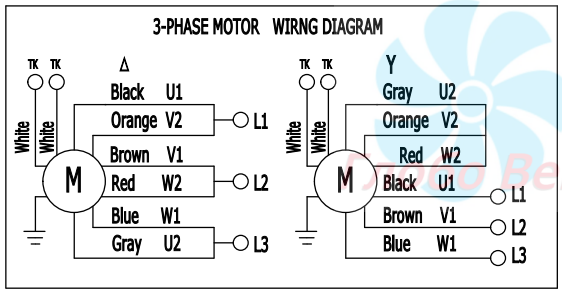

FLOW RATE CURVE:

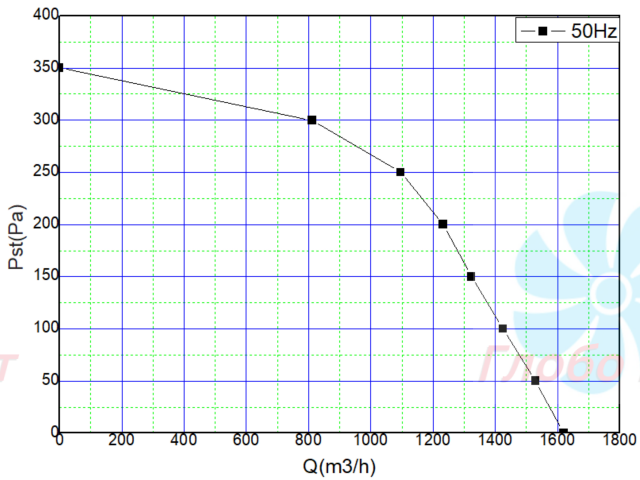

REV.	DESCRIPTION	APPROVED	DATE		SIGN	DATE
				DRN.BY	Jinxuan Tao	2025.3.14
				CHD.BY		
				ENG.BY		
				APP.BY		

LXFF4D225/90-M137/35-AB02

PROJECTION

A4

SCALE:

页码 SHEET: 1 of 1