NO.	4D200/80-M102/47A2-2025	A0

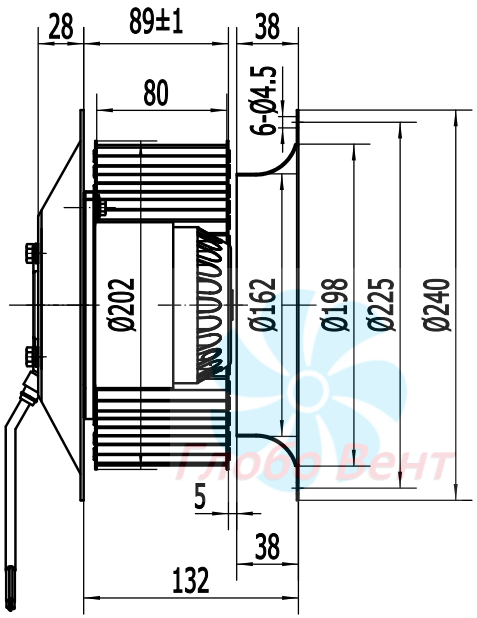

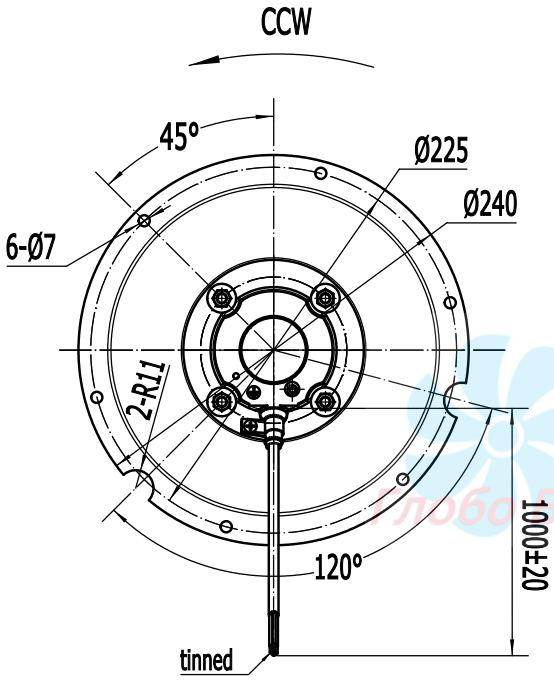

SPECIFICATION

UNIT	Forward Centrifugal Fans(AC)
MOTOR	Three phase motor
TYPE	LXFF4D200/80-M102/47-AB02
VOLTAGE(V)	230/400
FREQUENCY(Hz)	50
CURRENT(A)	1.0/0.58
INPUT POWER(W)	305
SPEED(r/min)	1300
NOISE(dBA)	75
CAPACITOR(μ F/450V)	/
ROTATION	CCW,looking into the end-shield
MOTOR PROTECTION	Thermocontact 150±5℃
PROTECTOR RESET TEMPERATURE	Reset temperature 90-130℃
INSULATION CLASS	F
TEMPERATURE RISE	95K max
PROTECTION CLASS	IP44
OPERATING TYPE	S1
MOUNTING TYPE	Side or horizontal rotor installation facing downwards
AMBIENT TEMPERATURE	-30°C~+60°C
PSTORAGING TEMPERATURE AND HUMIDITY	-40℃~80℃、5%~95%RH
BEARINGS	6001ZZ Ball bearings
ELECTRICAL CONNECTION	Lead wire UL1330 7G 20AWG+2G 24AWGmm²,Length 1000mm
IMPELLER MATERIAL	Metal
APPROVALS	CE
UNIT/BOX	1
NET WEIGHT/GROSS WEIGHT	4.87/5.4kg
PACKING	26.5×26.5×20cm

LABEL:

WEIGUANG® LXFF4D200/80-M102/47-AB02
Δ230V 50Hz 1.0A 150/305W 1300r/min
Y400V 50Hz 0.58A 150/305W 1300r/min
CL.F IP44 XX/XX
CE

WIRING DIAGRAM:

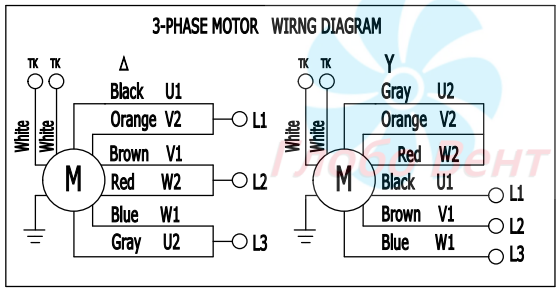

FLOW RATE CURVE:

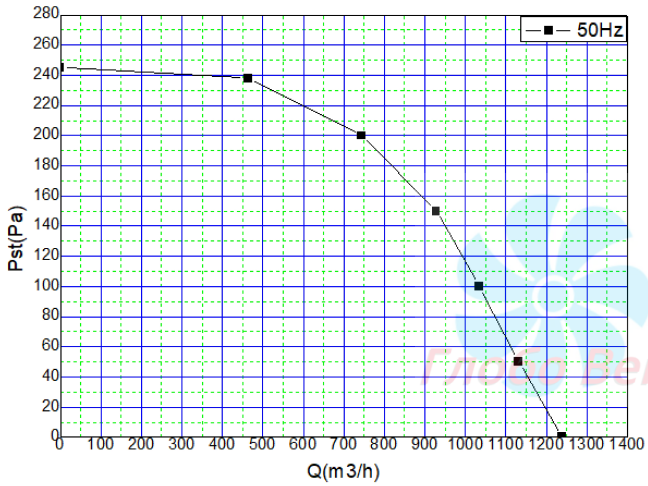

REV.	DESCRIPTION	APPROVED	DATE	APP.BY		
				DRN.BY	ChunBoLiu	2025.3.21
				CHD.BY		
				ENG.BY		

SIGN | DATE

LXFF4D200/80-M102/47-AB02

PROJECTION

A4

SCALE:

SHEET: 1 of 1