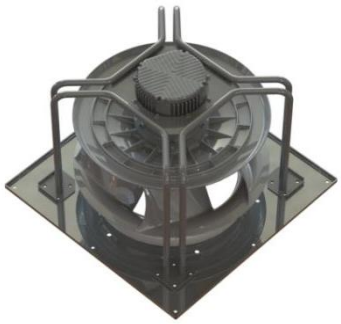

P2 系列 EC 后向离心风机 Φ315

EC Centrifugal Fan-P2

Backward Curved Φ315

版本号/Version number: V0

2025-03-11

额定数据 Nominal data

型号 Type	EC102/50E3G01-B315/140P2-02-Z	
成品品号 Finalized product quantity	/	
相数 Phase	1~	
额定电压 Rated voltage	VAC	230
电压范围 Rated voltage range	VAC	200 ~ 277
频率 Frequency	Hz	50/60
转速 Speed (rpm)	min^{-1}	2500
功率 Power consumption	W	740
电流 Current	A	3.3
最低环境温度 Min. ambient temperature	℃	-25
最高环境温度 Max. ambient temperature	℃	40

ErP 能效数据 ErP Energy efficiency data

		实际 Actual	规定 2015 Req. 2015
整体效率η_{es} Overall efficiency	%	68.4	50.1
测量类别 Measurement category		A	
效率类别 Efficiency category		静态 Static	
效率等级 N Efficiency grade N		80.3	62
转速调节 Variable speed drive		是 Yes	

*注：此文件仅供选型参考，如您有任何疑问或需要进一步的技术支持，请随时与我们联系。

Please note that this document is intended solely for selection reference. Should you have any inquiries or require additional technical support, do not hesitate to reach out to us.

特性曲线及数据 Characteristic curve and data

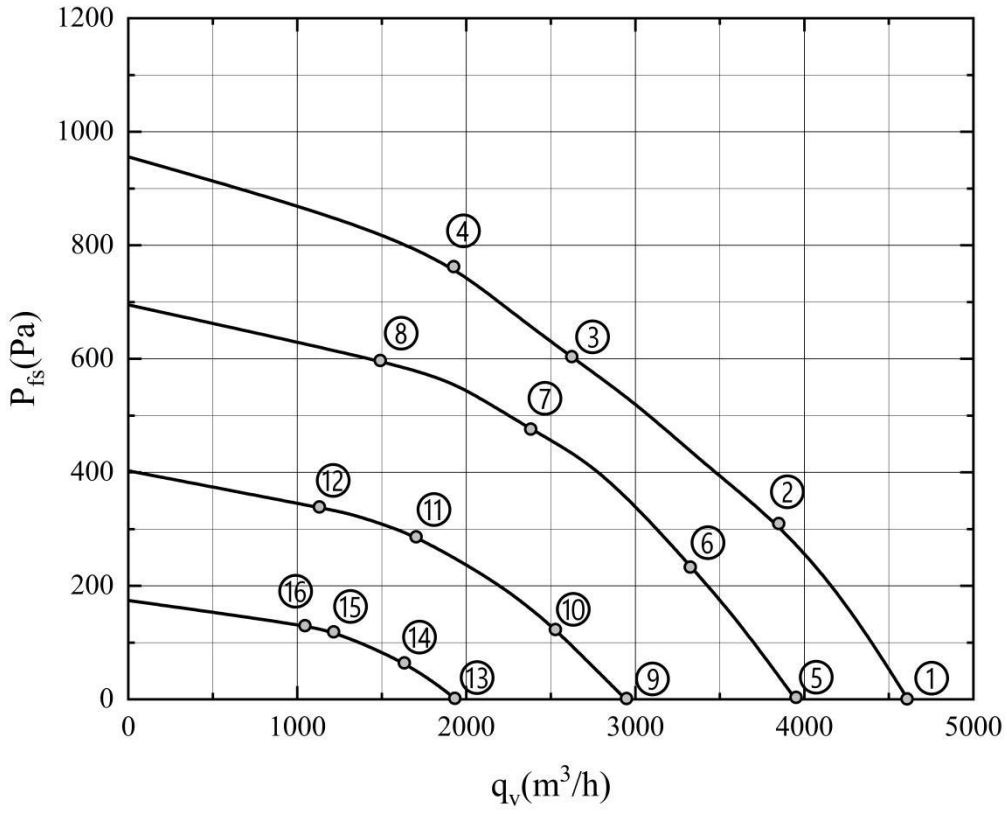

	电压	频率	转速	功率	电流	噪声	风量	静压	风量
	Rated voltage	Frequency	Speed	Power	Curren	Noise	Air flow	Static pressure	Air flow
	U(V)	f(Hz)	n(r/min)	P_{ed}(W)	I(A)	L_p(dB(A))	q_v(m^3/h)	p_{fs}(Pa)	q_v(cfm)
1	230	50	2500	610	2.6	83	4610	0	2713
2	230	50	2500	740	3.2	75	3850	310	2266
3	230	50	2500	740	3.2	70	2620	605	1542
4	230	50	2500	740	3.2	76	1640	760	965
5	230	50	2180	400	1.7	79	3950	0	2325
6	230	50	2180	500	2.2	70	3330	240	1960
7	230	50	2180	540	2.4	66	2380	480	1401
8	230	50	2180	480	2.1	70	1490	600	877
9	230	50	1660	190	0.8	71	2950	0	1736
10	230	50	1660	220	1.0	61	2530	125	1489
11	230	50	1660	250	1.1	62	1700	290	1001
12	230	50	1660	220	1.0	56	1130	340	665
13	230	50	1130	70	0.4	59	1940	0	1142
14	230	50	1130	85	0.4	53	1630	65	959
15	230	50	1130	90	0.4	50	1210	120	712
16	230	50	1130	90	0.4	53	1050	130	618

技术说明 Technical description

净量 Net weight		16kg	
毛重 Gross weight		18kg	
包装尺寸 Package size		47cm*47cm*35cm	
叶轮型号 Impeller model		315	
电机型号 Motor model		102	
转子表面 Rotor surface		黑色喷漆 Painted black	
叶轮材料 Impeller material		PP 塑料 PP Plastic	
面板材料 Support plate material		钢制，镀锌 Sheet steel, galvanized	
支架材料 Support bracket material		钢制，黑色喷漆 Sheet steel, painted black	
导风圈材料 Inlet nozzle material		钢制，镀锌 Sheet steel, galvanized	
叶片数量 Number of blades		5	
旋转方向 Direction of rotation		CW（从转子端看）Viewed toward rotor	
防护等级 Degree of protection		IP54	
安装方式 Installation type		轴水平安装或转子向下安装 Shaft horizontal or rotor downward installation	
绝缘等级 Insulation class		F	
储存环境温度 Storage temperature		-40℃～+80℃	
运行模式 Mode		S1	
振动 Vibration		≤ 4.6mm/s	
动平衡 Dynamic balance		G4.0	
轴承 Bearing		滚珠球轴承 Ball bearing	
风机寿命 Life time	时 Hour	40,000	额定电压，风机全速运转，40℃环境 At nominal voltage, running at full speed, environment temperature 40℃
电磁兼容 EMC		工业级 Industrial	
启动电压 Starting voltage		1V	
电源线对地耐电压 Power line to ground withstand voltage		DC2100V/1min	
控制特点 Control characteristics		0-10 VDC / PWM 控制输入端 0-10 VDC / PWM speed regulation	
		输出端 10VDC，最大 3.5mA Output terminal +10VDC, 3.5mA max	
		集成的 PID 控制器 Integrated PID controller	
		电机软件过热保护 Motor software overheat protection	
		软启动 Soft Start	
		RS485 MODBUS-RTU	
		报警继电器 Alarm relay	
		低电压/相故障检测 Under volt/Phase failure protection	

产品图纸　Product drawing

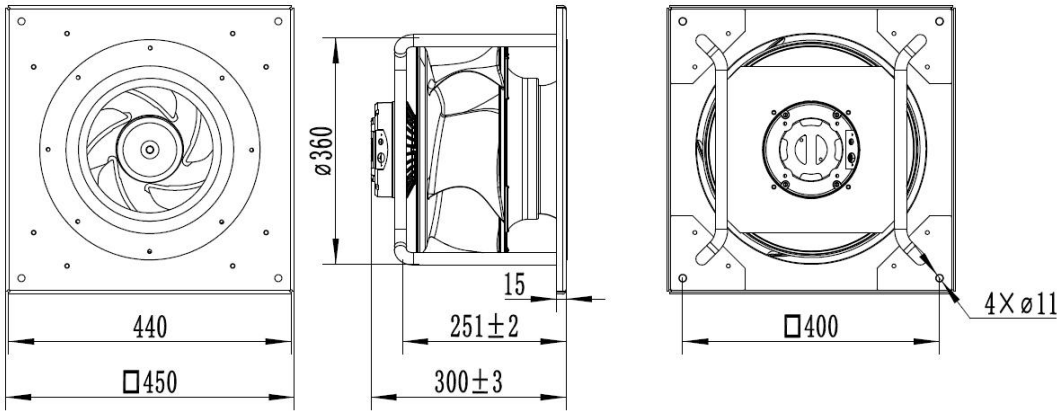

线路图 Connection diagram

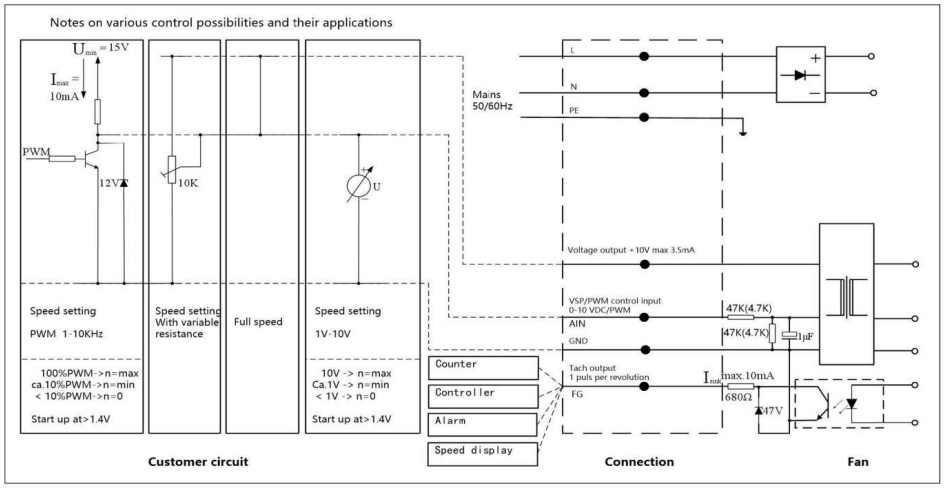

KL1

L	N	PE

KL2

+10V	AIN	GND	FG

Terminal	NO.	Connection	Function
KL1	1	L	电源相线，电压范围见铭牌 Power supply phase wire, voltage range, show on the nameplate
	2	N	电源中性线，电压范围见铭牌 Power supply neutral wire, voltage range, show on the nameplate
	3	PE	保护接地 Protective earth
KL2	1	+10V/max. 3.5mA	电压输出，给外部设备提供电源 Voltage output, power supply for ext. device
	2	AIN(0-10V /PWM)	控制0-10V或PWM输入，内部阻抗为10K Control input 0-10V or PWM, internal impedance 10K
	3	GND	控制接口部分参考地 Reference ground for control interface
	4	FG	输出：1脉冲/每转 Tach output: 1 pulse/revolution