1. Product specification

Technical data

Article number	
Type	FN080-SDQ.6N.V7
Designation	Axial fan with sickle blades
Rated values	3~400V±10% D/Y 50Hz P_1 1.80/1.15kW 3.90/ 2.20A ΔI=5% 900/ 700/min COSY 0,68 65°C
Electrical connection	Terminal box K62
Min. operating temperature °C	-40
Mounting type terminal box	Mounted on Stator
Type of protection	IP54
Thermal class	THCL155
Connection diagram	1360-108XA
Rating plate	1x fixed
Fitting position	H/Vu/Vo
Motor protection	thermal contact
Impregnation	Moisture and hot climate protection
Quality of bearings	ball bearing with long-time lubrication
Material Rotor	Aluminium
Painting rotor	Rotor 1 coat painted
colour rotor	RAL 9005 (jet black)
Material blades	Aluminium
Painting impeller	1 coat painted
Colour blades	RAL 9005 (jet black)
Guard grille type	ring grille
Painting pipe	Bell mouth 1 coat paint
Colour pipe	RAL 9005 (jet black)
Painting mot.suspens	Motor suspension 1 coat paint
colour suspension	RAL 9005 (jet black)
Weight kg	48,80
ErP Data	Efficiency η_{statA}: 36.8 % Efficiency: N_{actual} = 41.5 / N_{target} = 40* *ErP 2015

ZIEHL-ABEGG

2. Drawing

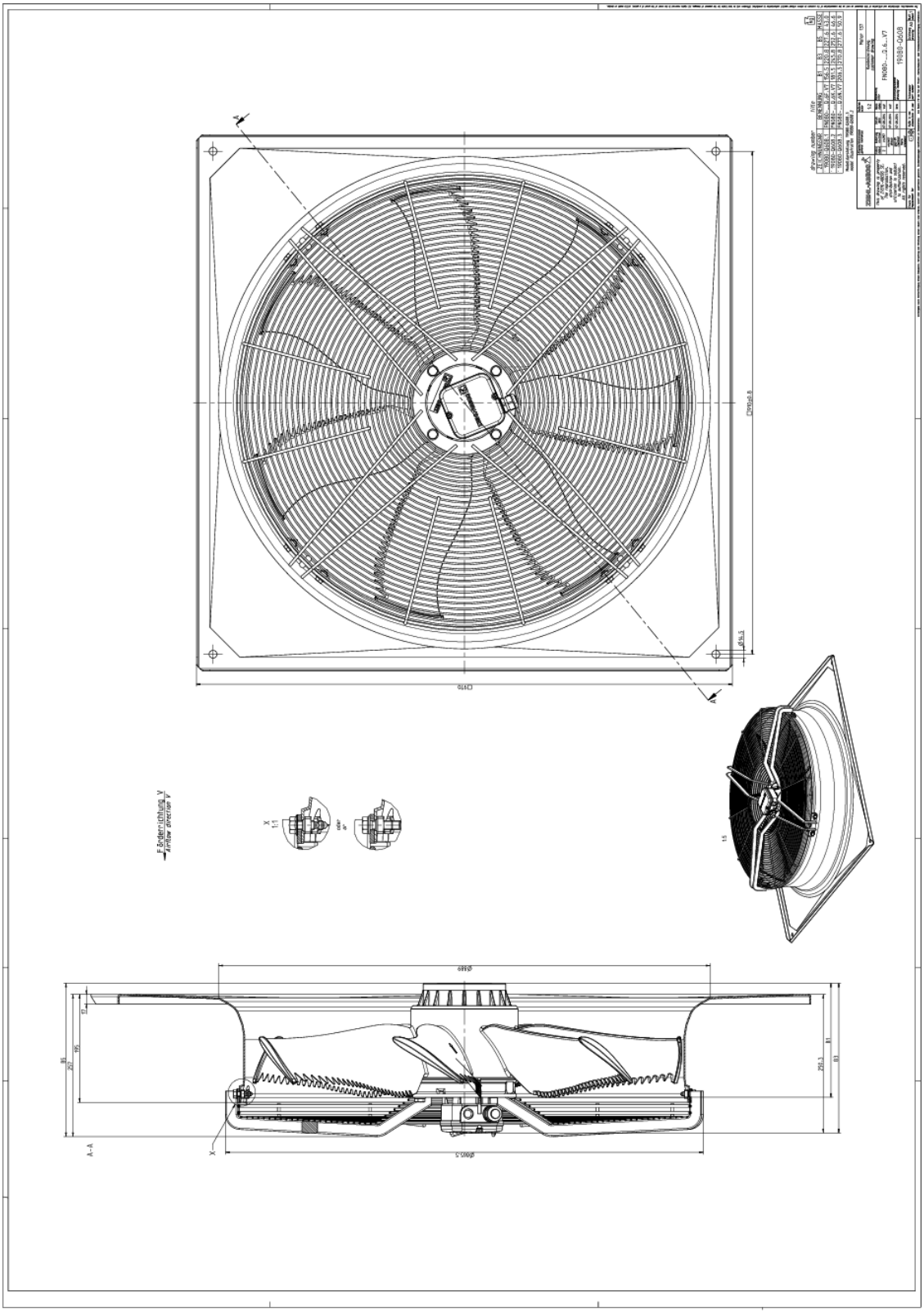

Dimensions in mm
Shown drawing is just to show the dimensions of the fan.

© ZIEHL-ABEGG SE TPL_PG_Datenblatt-V6-10 Release Date: 08.02.2013 Technical changes reserved

All rights reserved. Confidential and proprietary document, not to be disclosed or used except in accordance with applicable agreements. No disclosure to third parties, if not expressively agreed by ZA SE.

© ZIEHL-ABEGG SE TPL_PG_Datenblatt-V6-10 Release Date: 08.02.2013 Technical changes reserved

All rights reserved. Confidential and proprietary document, not to be disclosed or used except in accordance with applicable agreements. No disclosure to third parties, if not expressively agreed by ZA SE.

3. Connection diagram

1360-108XA

3~ motor, 2 speeds (Δ/Y switch over) with thermostatic switch (if built in).Without bridge when using speed change-overswitch.

U1	brown
V1	blue
W1	black
U2	red
V2	grey
W2	orange
TB	white

High speed/D-connection

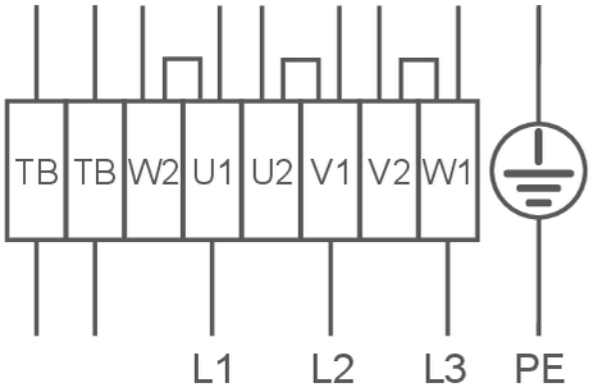

Low speed/Y-connection

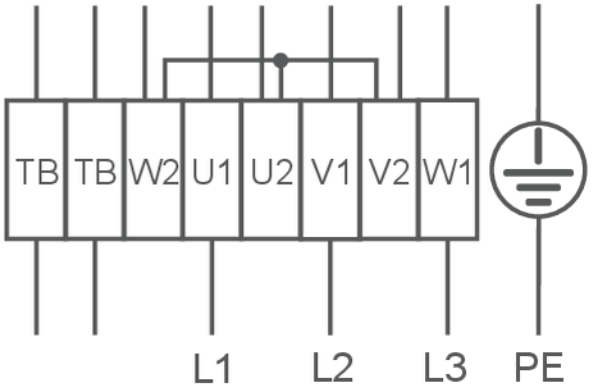

© ZIEHL-ABEGG SE TPL_PG_Datenblatt-V6-10 Release Date: 08.02.2013 Technical changes reserved

All rights reserved. Confidential and proprietary document, not to be disclosed or used except in accordance with applicable agreements. No disclosure to third parties, if not expressively agreed by ZA SE.

4. EU-Declaration of conformity



The Royal League in ventilation, **control** and drive technology

Intelligent control technology for any application

ZIEHL-ABEGG system capabilities:
Everything from a single source – perfectly matched for optimal performance

Please contact us. We would be pleased to design an individual solution for your requirements.

We would like to welcome you on our worldwide exhibitions. Please find our next exhibitions here.

© ZIEHL-ABEGG SE TPL_PG_Datenblatt-V6-10 Release Date: 08.02.2013 Technical changes reserved
All rights reserved. Confidential and proprietary document, not to be disclosed or used except in accordance with applicable agreements. No disclosure to third parties, if not expressively agreed by ZA SE.