AC Forward curved centrifugal fan, 4 poles, Φ225mm
YWF(K)4E225-GQ



Performance curve

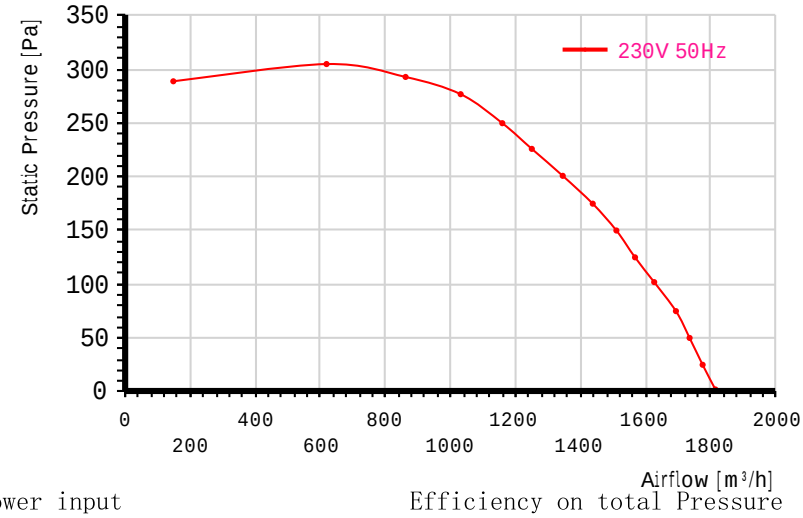

Power input

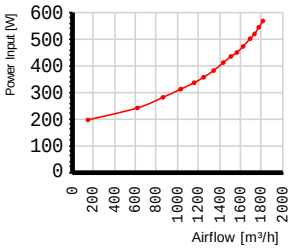

Efficiency on total Pressure

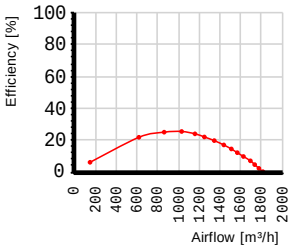

Product Features

☞Motor technology:AC
☞Supply voltage:1P
☞Supply frequency:50 Hz
☞Rated voltage:230 VAC
☞Power input:510 W
☞Current:2.3 A
☞Speed:1320 r/min
☞Perm.amb.temp:-25℃~+50℃
☞Inlet type:Single Inlet
☞Rotation:Counter-clockwise(Seen from cable exit)
☞Protection class:IP54
☞Insulation class:F
☞Impeller material:Galvanised sheet steel
☞Acoustic:80 dB(A)
☞Thermal Protector:Can be configured as requirements
☞Capacitor:8 uF
☞Housing:Without housing; With inlet ring;

Wiring diagram(Default without thermal protector)

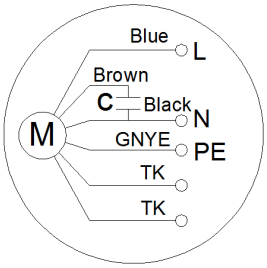

Dimensions (in mm)

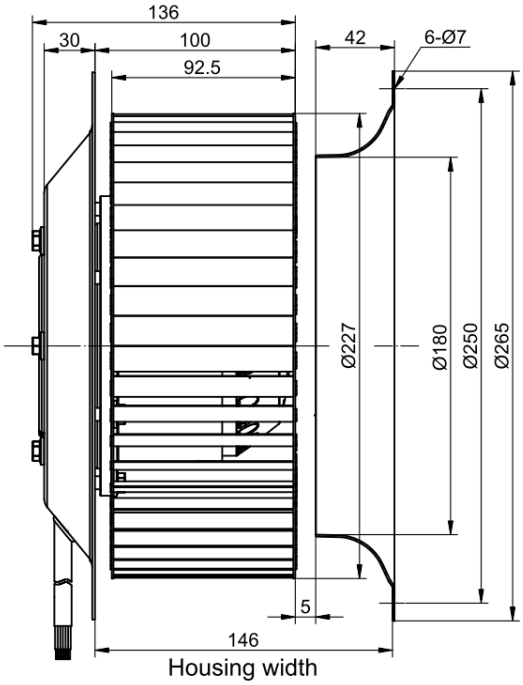

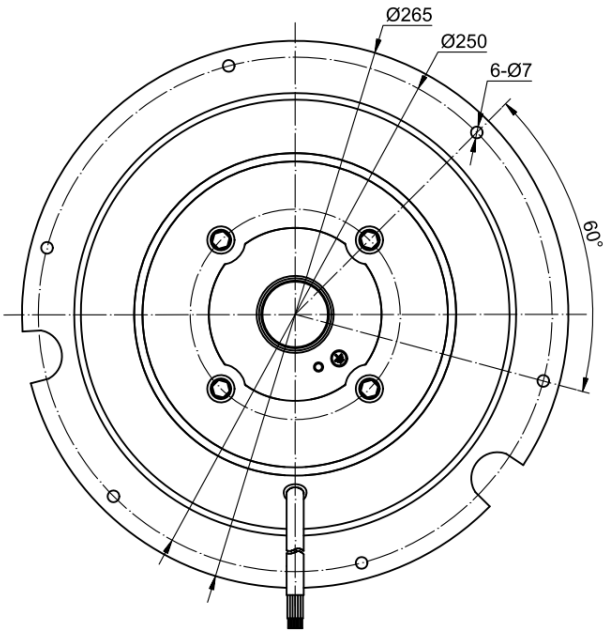

2025-01-11 21:40 Exported from MZFan Selector(V2.7.0.0) DB serialNo=90155