AC Backward curved centrifugal fan, 4 poles, Φ630mm

YWF(K)4D630-GH50



Performance curve

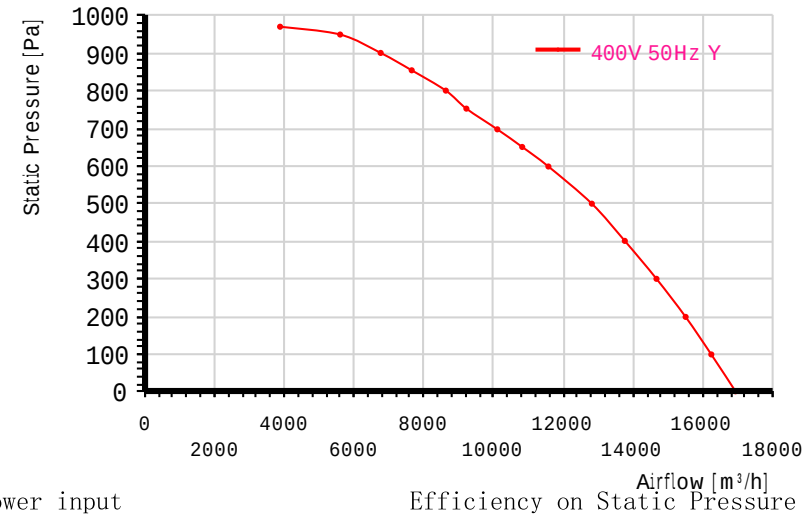

Product Features

- ☞Motor technology:AC
- ☞Supply voltage:3P
- ☞Supply frequency:50 Hz
- ☞Rated voltage:230/400 VAC
- ☞Power input:4300 W
- ☞Current:11.8/6.8 A
- ☞Speed:1370 r/min
- ☞Perm.amb.temp:-25℃~+60℃
- ☞Inlet type:Single Inlet
- ☞Rotation:Counter-clockwise(Seen from cable exit)
- ☞Protection class:IP54
- ☞Insulation class:F
- ☞Impeller material:Sheet aluminium
- ☞Acoustic:81 dB(A)
- ☞Thermal Protector:Can be configured as requirements
- ☞Housing:Without housing; With inlet ring;

Power input

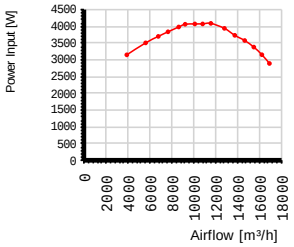

Efficiency on Static Pressure

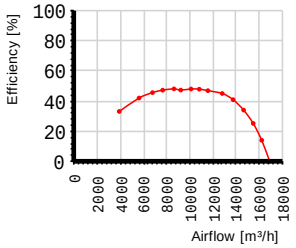

Wiring diagram(Default without thermal protector)

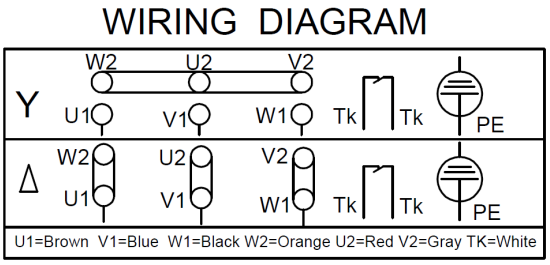

Dimensions mm

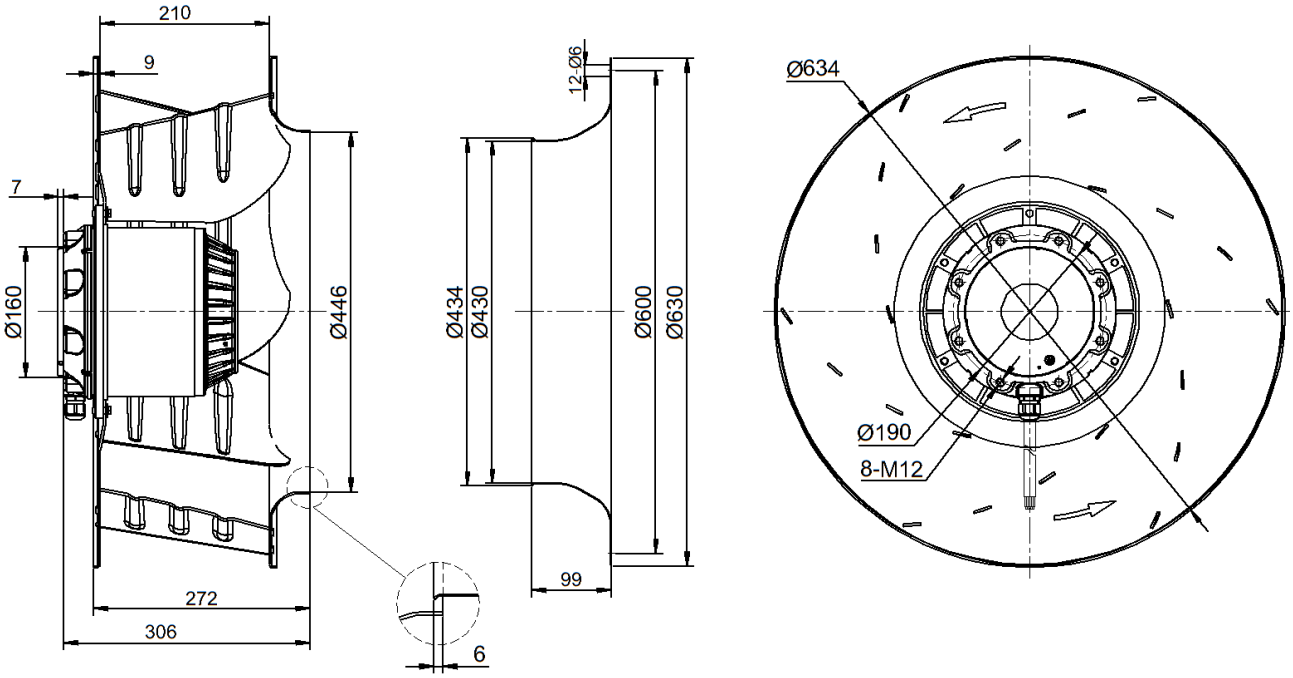

2023-12-11 14:46 Exported from MZFan Selector(V2.4.2.0) DB serialNo=45000