AC Forward curved centrifugal fan, 4 poles, Φ225mm

YWF(K)4D225-GQ



Performance curve

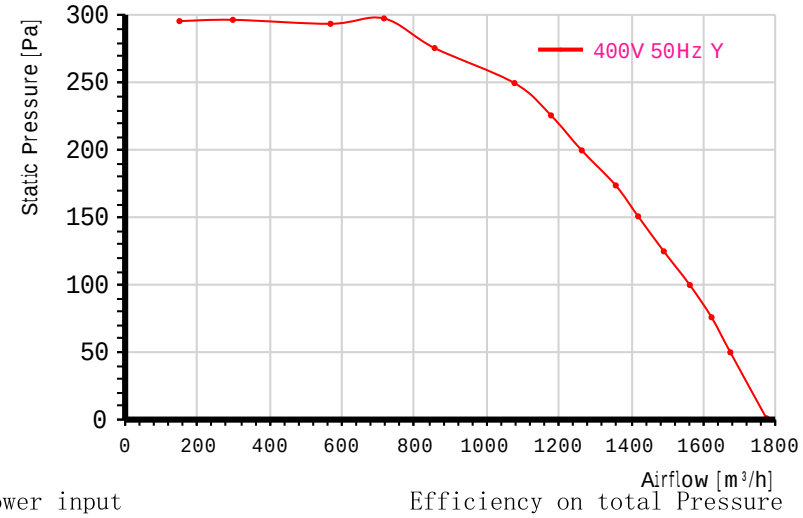

Power input

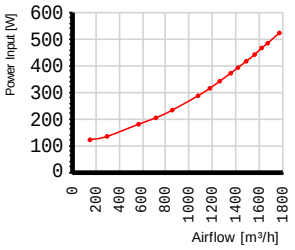

Efficiency on total Pressure

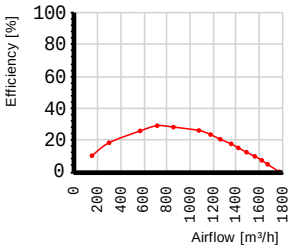

Product Features

- ☞Motor technology:AC
- ☞Supply voltage:3P
- ☞Supply frequency:50 Hz
- ☞Rated voltage:230/400 VAC
- ☞Power input:490 W
- ☞Current:1.43/0.82 A
- ☞Speed:1300 r/min
- ☞Perm.amb.temp:-25℃~+50℃
- ☞Inlet type:Single Inlet
- ☞Rotation:Counter-clockwise(Seen from cable exit)
- ☞Protection class:IP54
- ☞Insulation class:F
- ☞Impeller material:Galvanised sheet steel
- ☞Acoustic:80 dB(A)
- ☞Thermal Protector:Can be configured as requirements
- ☞Housing:Without housing; With inlet ring;

Wiring diagram(Default without thermal protector)

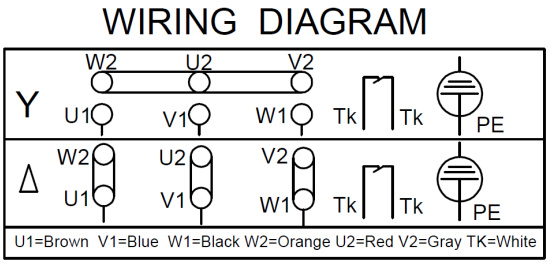

Dimensions (in mm)

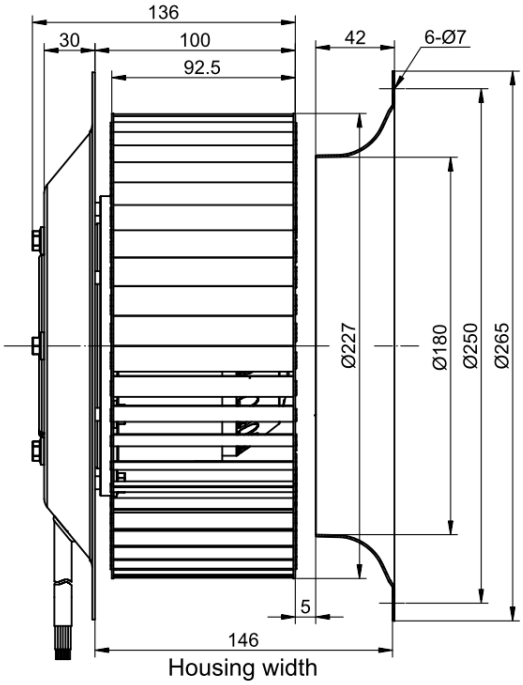

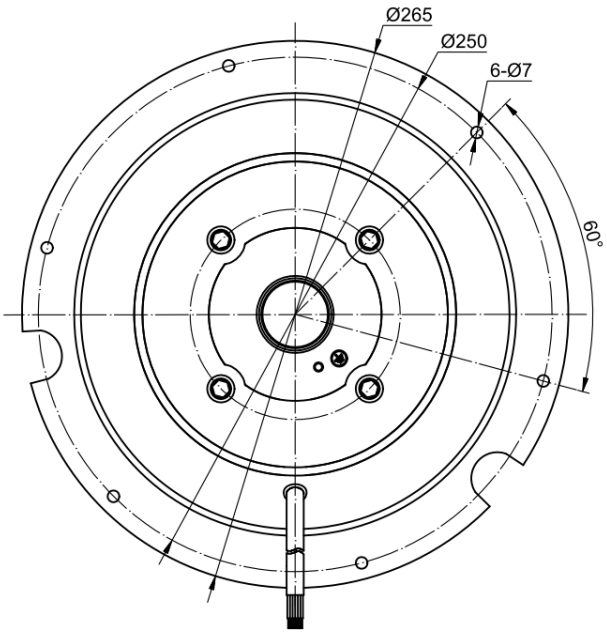

2025-01-11 21:51 Exported from MZFan Selector(V2.7.0.0) DB serialNo=90155