G3G200-GN18-01

EC centrifugal fan

backward curved, single inlet

with housing (flange), Gas blower for gas-condensing heating



ebm-papst Mulfingen GmbH & Co. KG
Bachmühle 2 · D-74673 Mulfingen
Phone +49 7938 81-0
Fax +49 7938 81-110
info1@de.ebmpapst.com
www.ebmpapst.com

Limited partnership · Headquarters Mulfingen
County court Stuttgart · HRA 590344

General partner Elektrobau Mulfingen GmbH · Headquarters Mulfingen
County court Stuttgart · HRB 590142

ErP2015 EXCEEDS THE NORM

Nominal data

Type	**G3G200-GN18-01**
Motor	**M3G084-DF**

Phase		1~
Nominal voltage	VAC	230
Nominal voltage range	VAC	208 .. 240
Frequency	Hz	50/60
Type of data definition		ml
Speed	min^{-1}	5700
Power input	W	750
Current draw	A	3.6 (208V)
Min. ambient temperature	°C	-20
Max. ambient temperature	°C	60
Min. temp. of flow medium	°C	0
Max. temp. of flow medium	°C	60

ml = Max. load · me = Max. efficiency · fa = Running at free air · cs = Customer specs · cu = Customer unit
Subject to alterations

Data according to ErP directive

Installation category	A
Efficiency category	Static
Variable speed drive	Yes
Specific ratio*	1.02

* Specific ratio = 1 + p_{fs} / 100 000 Pa

		Actual	Request 2013	Request 2015
Overall efficiency η_{es}	%	54.3	45.2	48.2
Efficiency grade N		67.1	58	61
Power input P_{ed}	kW	0.6		
Air flow q_v	m^3/h	485		
Pressure increase p_{fs}	Pa	2219		
Speed n	min^{-1}	5710		

Data definition with optimum efficiency. LU-76333
The ErP data is determined using a motor-impeller combination in a standardised measurement configuration.

ebmpapst

EC centrifugal fan

backward curved, single inlet

with housing (flange), Gas blower for gas-condensing heating

Technical features

Mass	9.2 kg
Size	200 mm
Surface of rotor	Coated in black
Material of protective cover	Polyflam RPP 374-ND CS1 (UL 97-V0)
Material of impeller	Aluminium sheet
Housing material	Die-cast aluminium
Number of blades	7
Direction of rotation	Clockwise, seen on rotor
Type of protection	IP 20
Insulation class	"B"
Max. permissible ambient motor temp. (transp./ storage)	+80 °C
Min. permissible ambient motor temp. (transp./storage)	-40 °C
Mounting position	Any
Condensate discharge holes	Rotor-side
Operation mode	S1
Motor bearing	Ball bearing
Technical features	- Tach output - Over-temperature-protected electronics / motor - PFC, active - Motor current limit - Line undervoltage / phase failure detection - PWM control input - Control input 0-10 V
EMC interference immunity	Acc. to EN 61000-6-2 (industrial environment)
EMC harmonics	Acc. to EN 61000-3-2/3
EMC interference emission	Acc. to EN 61000-6-4 (industrial environment)
Touch current acc. IEC 60990 (measuring network Fig. 4, TN system)	<= 3.5 mA
Electrical leads	With plug
Motor protection	Locked-rotor protection
Protection class	I (if protective earth is connected by customer)
Approval	CCC; CSA C22.2 Nr.113; EAC; UL 507

ebm-papst Mulfingen GmbH & Co. KG · Bachmühle 2 · D-74673 Mulfingen · Phone +49 (0) 7938 81-0 · Fax +49 (0) 7938 81-110 · info1@de.ebmpapst.com · www.ebmpapst.com

EC centrifugal fan

backward curved, single inlet

with housing (flange), Gas blower for gas-condensing heating

Product drawing

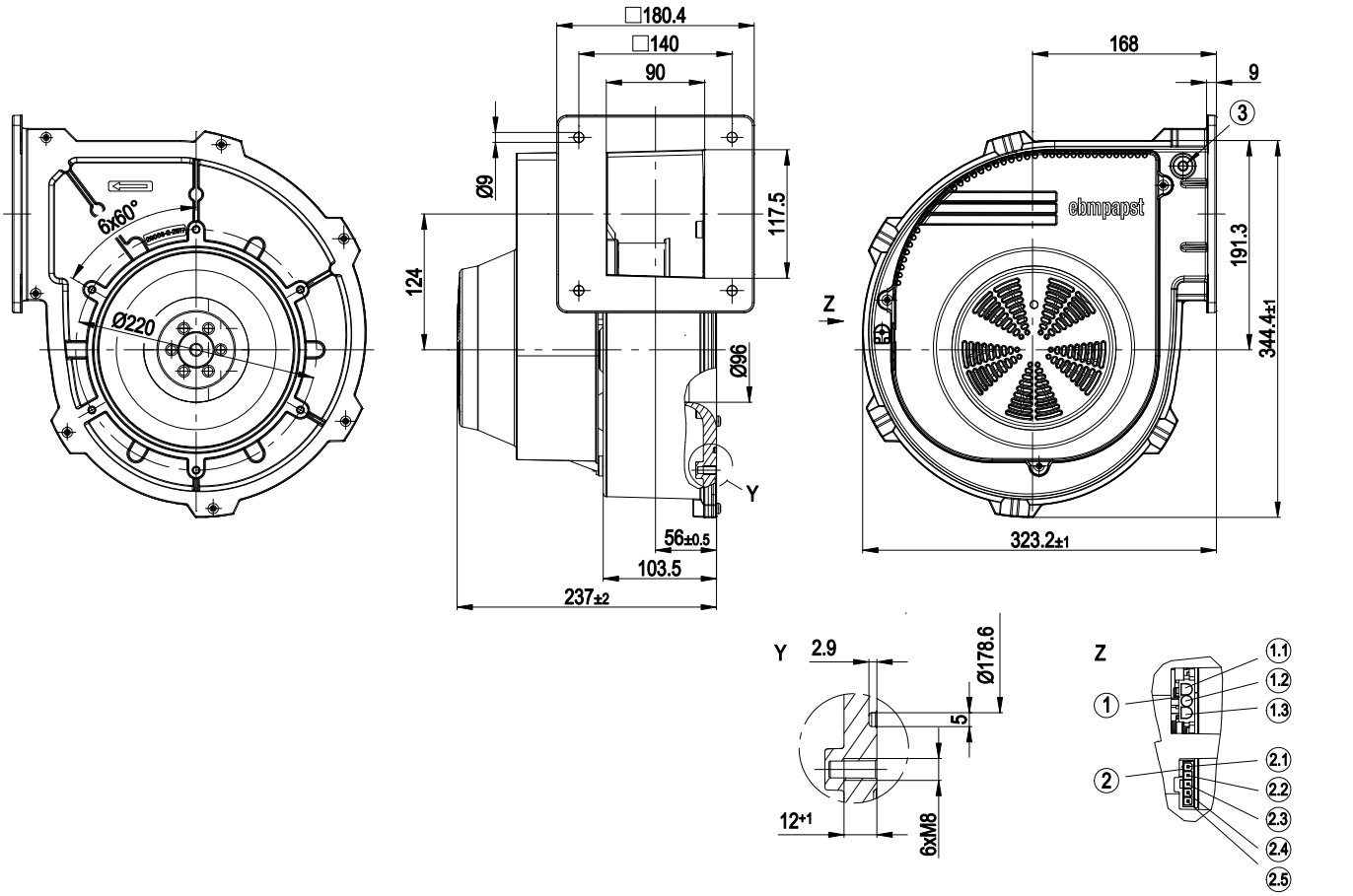

Y	Detail Y
Z	View Z / plug assignment
1	3-pole strip to fit mating connector (not included in standard scope of delivery) Tyco No. 350766-1, female connector Tyco No. 926884-1
1.1	L
1.2	N
1.3	PE
2	5-pole strip to fit mating connector (not included in standard scope of delivery) Molex No. 39-01-4050, female connector Molex No. 39-00-0059
2.1	+
2.2	Speed monitoring
2.3	0-10 VDC
2.4	PWM input
2.5	-
3	Pressure tap optionally available

ebm-papst Mulfingen GmbH & Co. KG · Bachmühle 2 · D-74673 Mulfingen · Phone +49 (0) 7938 81-0 · Fax +49 (0) 7938 81-110 · info1@de.ebmpapst.com · www.ebmpapst.com

EC centrifugal fan

backward curved, single inlet

with housing (flange), Gas blower for gas-condensing heating

Connection screen

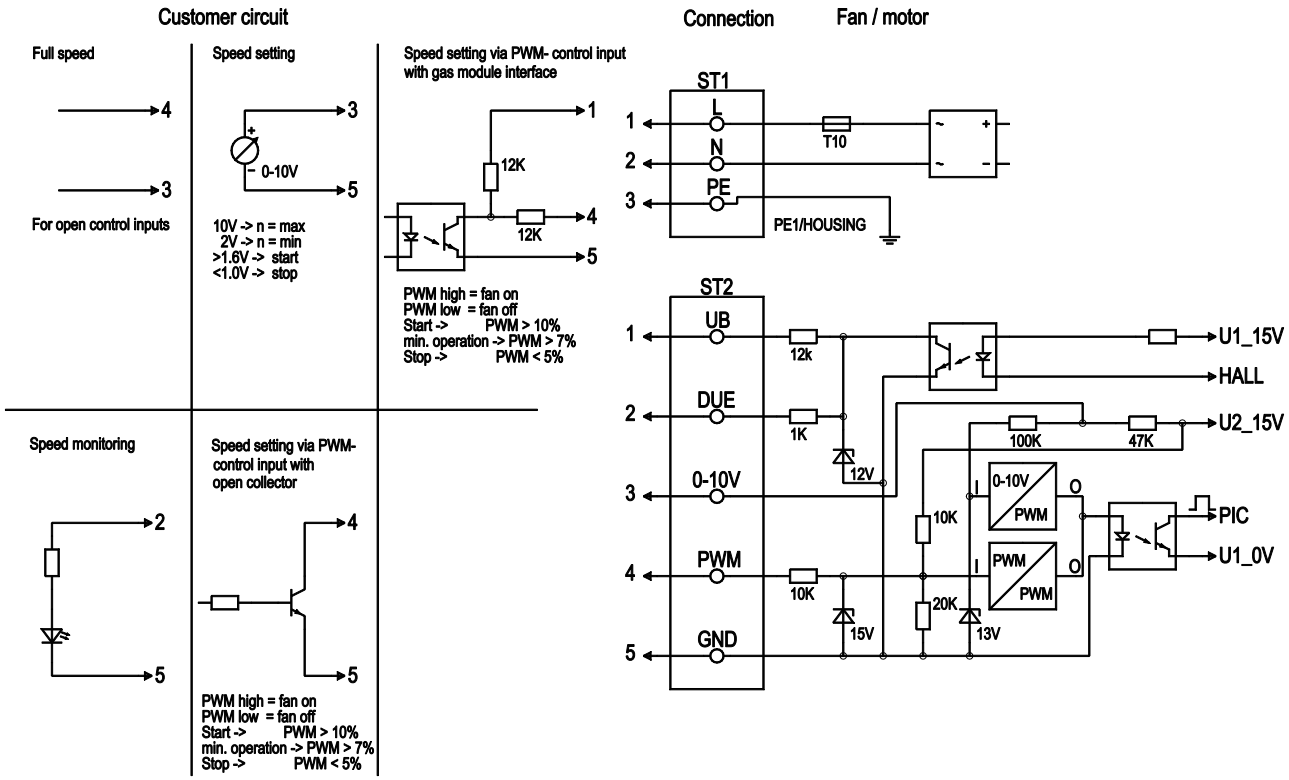

No.	Conn.	Designation	Function / assignment
ST1	1; 2; 3	L; N; PE	Power supply 230 VAC, 50 - 60 Hz, phase, neutral, protective earth
ST2	1	UB	External voltage 16 - 45 VDC, residual ripple +/- 3.5%, SELV
ST2	2	Tach	Speed monitoring, 3 pulses per revolution, SELV
ST2	3	0 - 10 V	Control input 0 - 10 V, impedance 100k, SELV
ST2	4	PWM	Control input PWM, 1 - 6 kHz, SELV
ST2	5	GND	GND - Connection for control interface, SELV

ebm-papst Mulfingen GmbH & Co. KG · Bachmühle 2 · D-74673 Mulfingen · Phone +49 (0) 7938 81-0 · Fax +49 (0) 7938 81-110 · info1@de.ebmpapst.com · www.ebmpapst.com

EC centrifugal fan

backward curved, single inlet

with housing (flange), Gas blower for gas-condensing heating

Charts: Air flow 50 Hz

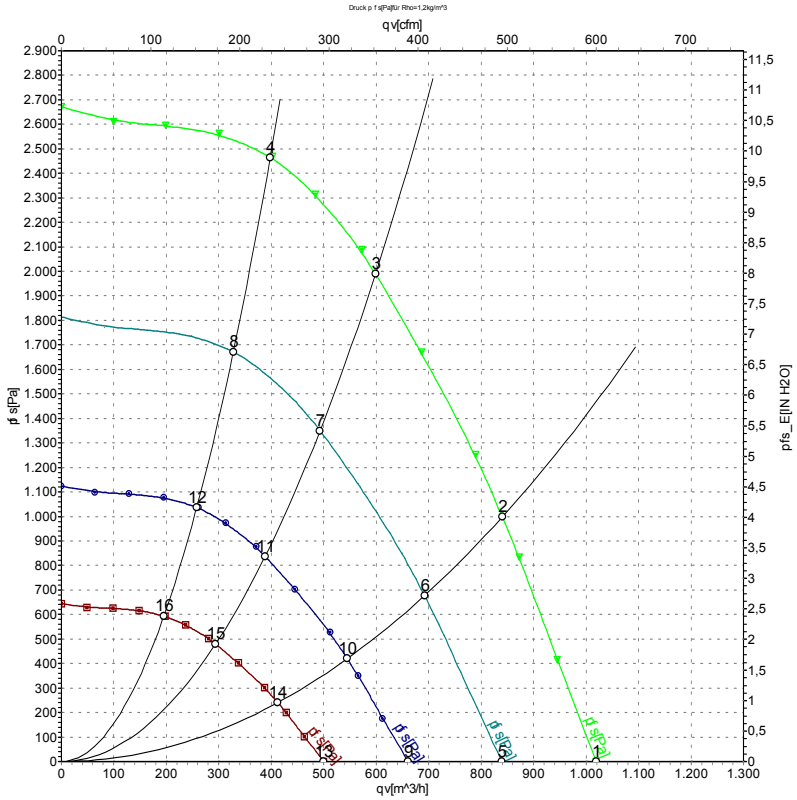

Air performance measured as per ISO 5801 Installation category A. For detailed information on the measuring set-up, please contact ebm-papst. Suction-side noise levels: LwA measured as per ISO 13347 / LpA measured with 1m distance to fan axis. The values given are valid under the measuring conditions mentioned above and may vary according to the actual installation situation. With any deviation from the standard set-up, the specific values have to be checked and reviewed with the unit installed.

Measured values

	U	f	n	P_{ed}	I	LpA_{in}	qv	p_{fs}
	V	Hz	min^{-1}	W	A	dB(A)	m^3/h	Pa
1	230	50	5700	681	2.97	86	1020	0
2	230	50	5700	750	3.30	84	840	1000
3	230	50	5700	682	2.98	81	600	2000
4	230	50	5700	557	2.44	78	400	2475
5	230	50	4700	381	1.66	81	840	0
6	230	50	4700	413	1.80	79	690	677
7	230	50	4700	381	1.67	76	495	1352
8	230	50	4700	311	1.36	74	330	1678
9	230	50	3700	186	0.81	75	660	0
10	230	50	3700	201	0.88	73	545	420
11	230	50	3700	186	0.81	71	390	838
12	230	50	3700	152	0.67	69	260	1040
13	230	50	2800	80	0.35	69	500	0
14	230	50	2800	87	0.38	66	410	240
15	230	50	2800	81	0.35	64	295	480
16	230	50	2800	66	0.29	63	195	595

U = Supply voltage · f = Frequency · n = Speed · P_{ed} = Power input · I = Current draw · LpA_{in} = Sound pressure level inlet side · qv = Air flow · p_{fs} = Pressure increase

ebm-papst Mulfingen GmbH & Co. KG · Bachmühle 2 · D-74673 Mulfingen · Phone +49 (0) 7938 81-0 · Fax +49 (0) 7938 81-110 · info1@de.ebmpapst.com · www.ebmpapst.com