G1G170-AB53-03

EC centrifugal fan

backward curved, single inlet

with housing (flange), Gas blower for gas-condensing heating



ebm-papst Mulfingen GmbH & Co. KG
Bachmühle 2 · D-74673 Mulfingen
Phone +49 7938 81-0
Fax +49 7938 81-110
info1@de.ebmpapst.com
www.ebmpapst.com

Limited partnership · Headquarters Mulfingen
County court Stuttgart · HRA 590344

General partner Elektrobau Mulfingen GmbH · Headquarters Mulfingen
County court Stuttgart · HRB 590142

ErP2015 EXCEEDS THE NORM

Nominal data

Type	**G1G170-AB53-03**	
Motor	**M1G074-CF**	
Phase		1~
Nominal voltage	VAC	230
Frequency	Hz	50/60
Type of data definition		fa
Speed	min^{-1}	5830
Power input	W	360
Current draw	A	1.6
Min. ambient temperature	°C	- 25
Max. ambient temperature	°C	+55
Min. temp. of flow medium	°C	-25
Max. temp. of flow medium	°C	+80

ml = max. load · me = max. efficiency · fa = running at free air · cs = customer specs · cu = customer unit
Subject to alterations

Data according to ErP directive

Installation category	A
Efficiency category	Static
Variable speed drive	Yes
Specific ratio*	1.02

* Specific ratio = 1 + p_{fs} / 100 000 Pa

		Actual	Request 2013	Request 2015
Overall efficiency η_{es}		58.8	42	45
Efficiency grade N		74.8	58	61
Power input P_{ed}	kW	0.3		
Air flow q_v	m^3/h	285		
Pressure increase p_{fs}	Pa	2000		
Speed n	min^{-1}	6220		

Data established at point of optimum efficiency

ebmpapst

EC centrifugal fan

backward curved, single inlet

with housing (flange), Gas blower for gas-condensing heating

Technical features

Mass	4.47 kg
Size	170 mm
Surface of rotor	Coated in black
Material of protective cover	Polyflam RPP 374-ND CS1 (UL 97-V0)
Material of impeller	Aluminum sheet
Housing material	Die-cast aluminium
Direction of rotation	Clockwise, seen on rotor
Type of protection	IP 20
Insulation class	"B"
Max. permissible ambient motor temp. (transp./ storage)	+80 °C
Min. permissible ambient motor temp. (transp./storage)	-40 °C
Mounting position	Any
Cooling bore / aperture	Rotor-side
Operation mode	S1
Motor bearing	Ball bearing
Technical features	- PFC, active - PWM control input - Motor current limit - Tach output - Over-temperature protected motor
EMC interference immunity	Acc. to EN 61000-6-2 (industrial environment)
EMC harmonics	Acc. to EN 61000-3-2/3
EMC interference emission	Acc. to EN 61000-6-3 (household environment)
Touch current acc. IEC 60990 (measuring network Fig. 4, TN system)	<= 3.5 mA
Electrical leads	With plug
Motor protection	Thermal overload protector (TOP) wired internally
Approval	UL 507; CSA C22.2 Nr.113

ebm-papst Mulfingen GmbH & Co. KG · Bachmühle 2 · D-74673 Mulfingen · Phone +49 (0) 7938 81-0 · Fax +49 (0) 7938 81-110 · info1@de.ebmpapst.com · www.ebmpapst.com

EC centrifugal fan

backward curved, single inlet

with housing (flange), Gas blower for gas-condensing heating

Product drawing

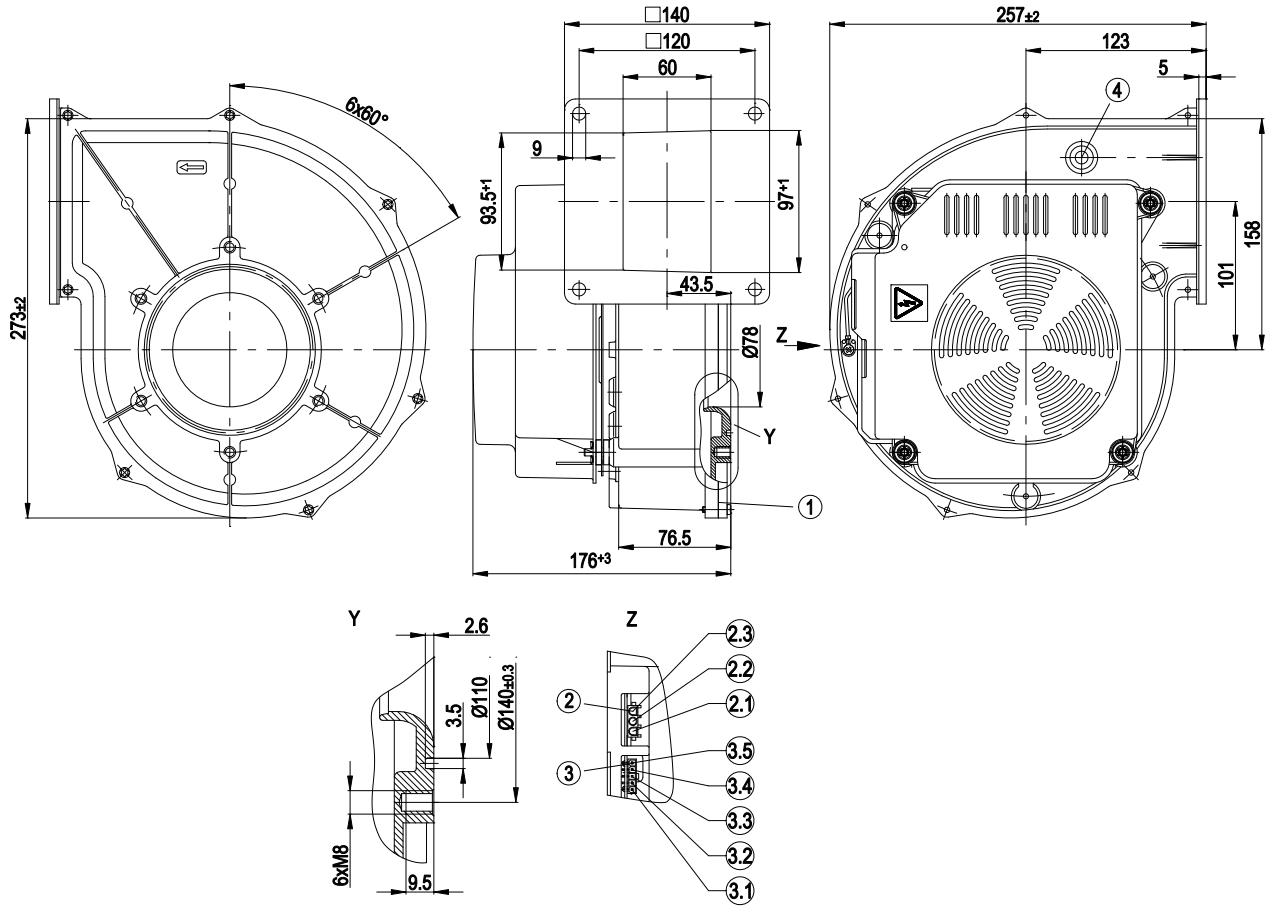

1	Housing side parts sealed with NBR round cord (pentane-resistant)
Z	View Z
2	3-pole strip; mating connector (not included in delivery): tyco No. 350 766-1; female connector: No. 926 884-1
2.1	L
2.2	N
2.3	PE
3	5-pole strip; mating connector (not included in delivery) Molex No. 39-01-4050, female connector Molex No. 39-00-0059
3.1	(+)
3.2	Speed monitoring
3.3	Not assigned
3.4	PWM input
3.5	(-)
4	Bleeder connection for pressure relief possible

ebm-papst Mulfingen GmbH & Co. KG · Bachmühle 2 · D-74673 Mulfingen · Phone +49 (0) 7938 81-0 · Fax +49 (0) 7938 81-110 · info1@de.ebmpapst.com · www.ebmpapst.com

EC centrifugal fan

backward curved, single inlet

with housing (flange), Gas blower for gas-condensing heating

Connection screen

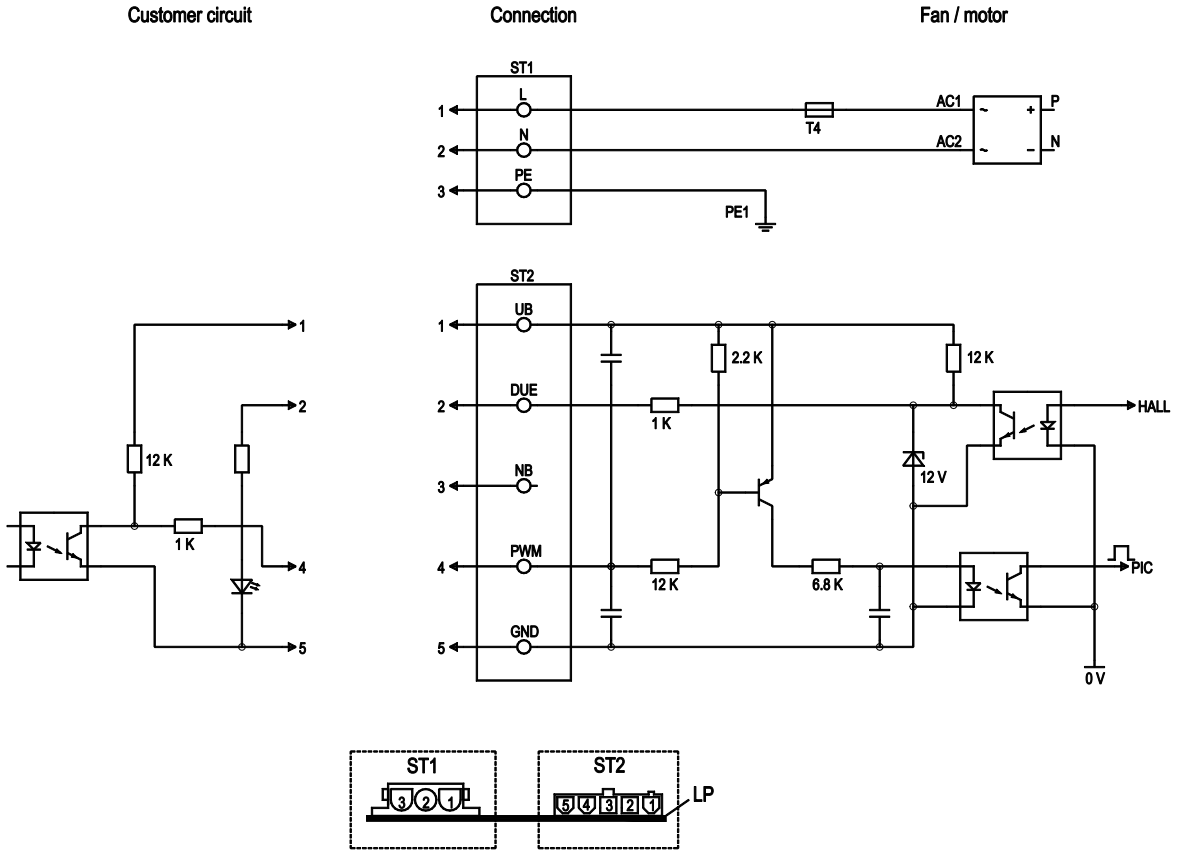

No.	Pin	Signal	Function / assignment
ST1	1,2,3	L, N, PE	Power supply 230 VAC, 50-60 Hz, neutral conductor, protective earth
ST2	1	UB	External voltage 18-43 VDC
ST2	2	Tach	Speed monitoring output connection, monitoring circuit output, 3 pulses per revolution, current source 2 mA
ST2	3	N.C.	Not assigned
ST2	4	PWM	PWM - 2 - 6 kHz control input, PWM on n = 100%, PWM low n = 0%
ST2	5	GND	GND - Connection for control interface

ebm-papst Mulfingen GmbH & Co. KG · Bachmühle 2 · D-74673 Mulfingen · Phone +49 (0) 7938 81-0 · Fax +49 (0) 7938 81-110 · info1@de.ebmpapst.com · www.ebmpapst.com

EC centrifugal fan

backward curved, single inlet

with housing (flange), Gas blower for gas-condensing heating

Charts: Air flow 50 Hz

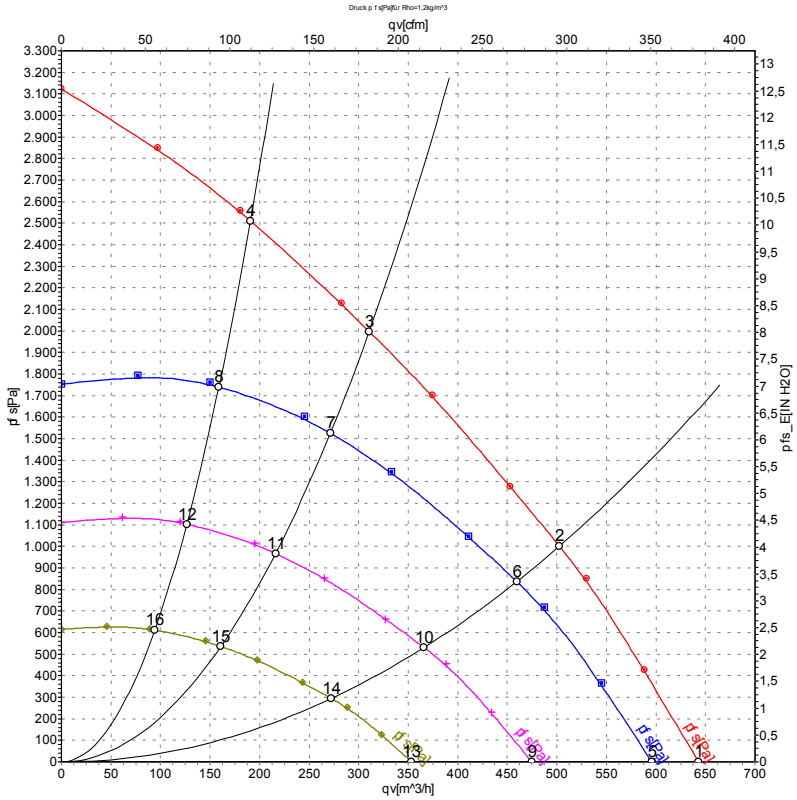

Measurement: LU-57509

Air performance measured as per ISO 5801 Installation category A. For detailed information on the measuring set-up, please contact ebm-papst. Suction-side noise levels: LwA measured as per ISO 13347 / LpA measured with 1m distance to fan axis. The values given are valid under the measuring conditions mentioned above and may vary according to the actual installation situation. With any deviation from the standard set-up, the specific values have to be checked and reviewed with the unit installed.

Measured values

	U	f	n	P_{ed}	I	qv	p_{fs}
	V	Hz	min^{-1}	W	A	m^3/h	Pa
1	230	50	5830	360	1.60	645	0
2	230	50	5905	346	1.52	505	1000
3	230	50	6175	308	1.35	310	2000
4	230	50	6480	268	1.18	190	2500
5	230	50	5400	287	1.26	595	0
6	230	50	5400	265	1.16	460	838
7	230	50	5400	206	0.91	270	1527
8	230	50	5400	156	0.68	160	1747
9	230	50	4300	145	0.63	475	0
10	230	50	4300	134	0.59	365	531
11	230	50	4300	104	0.46	215	968
12	230	50	4300	79	0.34	125	1108
13	230	50	3200	60	0.26	355	0
14	230	50	3200	55	0.24	270	294
15	230	50	3200	43	0.19	160	536
16	230	50	3200	32	0.14	95	614

U = Supply voltage · f = Frequency · n = Speed · P_{ed} = Power input · I = Current draw · qv = Air flow · p_{fs} = Pressure increase

ebm-papst Mulfingen GmbH & Co. KG · Bachmühle 2 · D-74673 Mulfingen · Phone +49 (0) 7938 81-0 · Fax +49 (0) 7938 81-110 · info1@de.ebmpapst.com · www.ebmpapst.com