

A2 系列翼型 EC 后向离心风机 Φ280

EC Centrifugal Fan-A2 Airfoil Backward Curved Φ280

版本号/Version number: V1

2024-12-30

额定数据 Nominal data

型号 Type	EC137/40D3G01-B280/100A2-01	
成品品号 Finalized product quantity	/	
相数 Phase	3~	
额定电压 Rated voltage	VAC	400
电压范围 Rated voltage range	VAC	380 ~ 480
频率 Frequency	Hz	50/60
转速 Speed (rpm)	min^{-1}	3250
功率 Power consumption	W	1300
电流 Current	A	2.0
最低环境温度 Min. ambient temperature	℃	-25
最高环境温度 Max. ambient temperature	℃	40

ErP 能效数据 ErP Energy efficiency data

		实际 Actual	规定 2015 Req. 2015
整体效率η_{es} Overall efficiency	%	61.4	52.5
测量类别 Measurement category		A	
效率类别 Efficiency category		静态 Static	
效率等级 N Efficiency grade N		70.9	62
转速调节 Variable speed drive		是 Yes	

*注：此文件仅供选型参考，如您有任何疑问或需要进一步的技术支持，请随时与我们联系。

Please note that this document is intended solely for selection reference. Should you have any inquiries or require additional technical support, do not hesitate to reach out to us.

特性曲线及数据 Characteristic curve and data

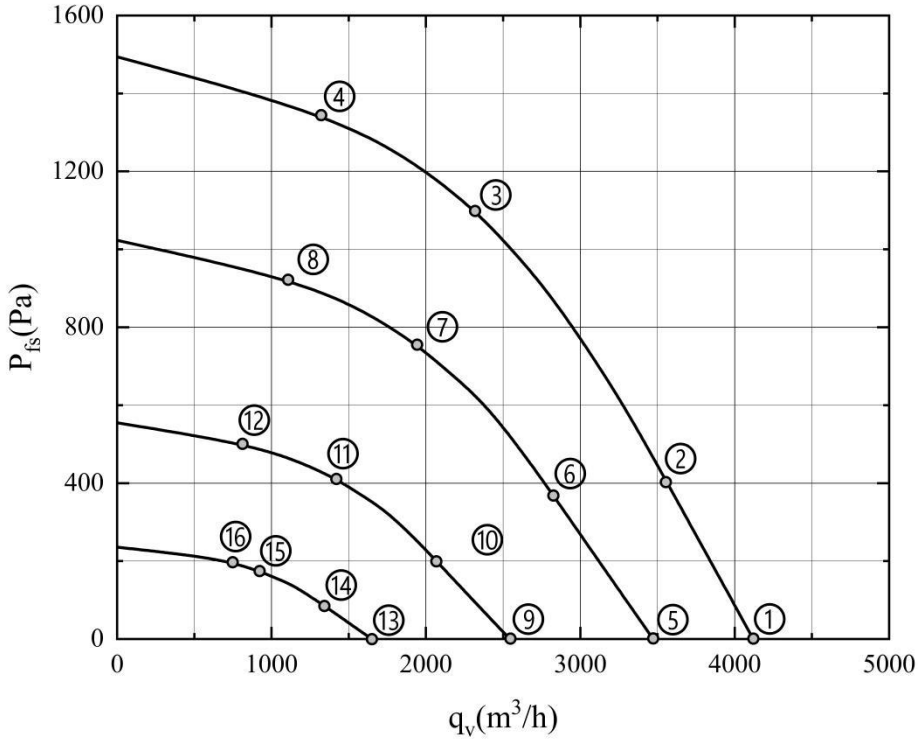

	电压	频率	转速	功率	电流	噪声	风量	静压	风量
	Rated voltage	Frequency	Speed	Power	Curren	Noise	Air flow	Static pressure	Air flow
	U(V)	f(Hz)	n(r/min)	P_{ed}(W)	I(A)	L_p(dB(A))	$q_v(m^3/h)$	p_{fs}(Pa)	q_v(cfm)
1	400	50	3250	1130	1.8	88	4120	0	2425
2	400	50	3250	1260	2.0	84	3370	540	1984
3	400	50	3250	1300	2.0	81	2310	1100	1360
4	400	50	3250	1030	1.6	83	1330	1350	783
5	400	50	2730	670	1.1	84	3470	0	2042
6	400	50	2730	750	1.2	79	2830	370	1666
7	400	50	2730	740	1.2	76	1940	760	1142
8	400	50	2730	610	1.0	77	1110	930	653
9	400	50	2040	280	0.4	76	2540	0	1495
10	400	50	2040	310	0.5	70	2070	200	1218
11	400	50	2040	310	0.5	68	1420	410	836
12	400	50	2040	260	0.4	71	820	500	483
13	400	50	1350	80	0.1	63	1650	0	971
14	400	50	1350	90	0.1	58	1340	90	789
15	400	50	1350	90	0.1	26	920	170	541
16	400	50	1350	90	0.1	59	760	200	447

技术说明 Technical description

净量 Net weight		8kg	
毛重 Gross weight		10kg	
包装尺寸 Package size		52cm*52cm*35cm	
叶轮型号 Impeller model		280	
电机型号 Motor model		137	
转子表面 Rotor surface		黑色喷漆 Painted black	
叶轮材料 Impeller material		铝制 Sheet aluminum	
面板材料 Support plate material		/	
支架材料 Support bracket material		/	
导风圈材料 Inlet nozzle material		钢制，镀锌 Sheet steel, galvanized	
叶片数量 Number of blades		7	
旋转方向 Direction of rotation		CW（从转子端看）Viewed toward rotor	
防护等级 Degree of protection		IP54	
安装方式 Installation type		轴水平安装或转子向下安装 Shaft horizontal or rotor downward installation	
绝缘等级 Insulation class		F	
储存环境温度 Storage temperature		-40℃～+80℃	
运行模式 Mode		S1	
振动 Vibration		≤ 4.6mm/s	
动平衡 Dynamic balance		G4.0	
轴承 Bearing		滚珠球轴承 Ball bearing	
风机寿命 Life time	时 Hour	40,000	额定电压，风机全速运转，40℃环境 At nominal voltage, running at full speed, environment temperature 40℃
电磁兼容 EMC		工业级 Industrial	
启动电压 Starting voltage		1V	
电源线对地耐电压 Power line to ground withstand voltage		DC2500V/1min	
控制特点 Control characteristics		0-10 VDC / PWM 控制输入端 0-10 VDC / PWM speed regulation	
		输出端 10VDC，最大 3.5mA Output terminal +10VDC, 3.5mA max	
		集成的 PID 控制器 Integrated PID controller	
		电机软件过热保护 Motor software overheat protection	
		软启动 Soft Start	
		RS485 MODBUS-RTU	
		报警继电器 Alarm relay	
		低电压/相故障检测 Under volt/Phase failure protection	

产品图纸　Product drawing

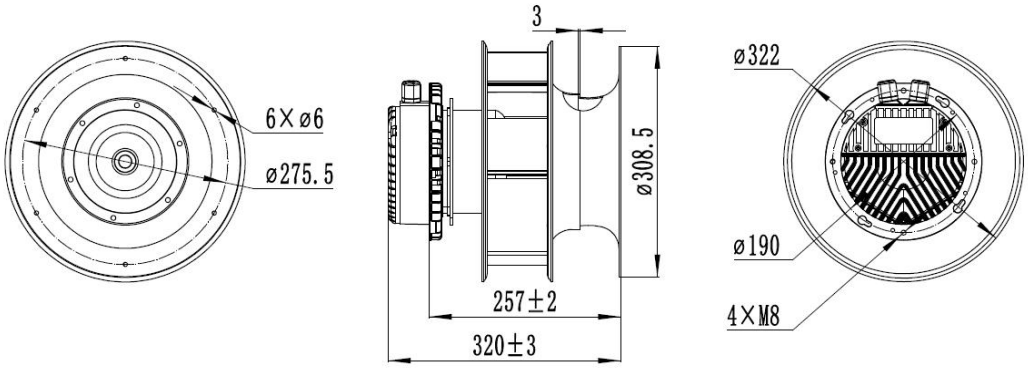

线路图 Connection diagram

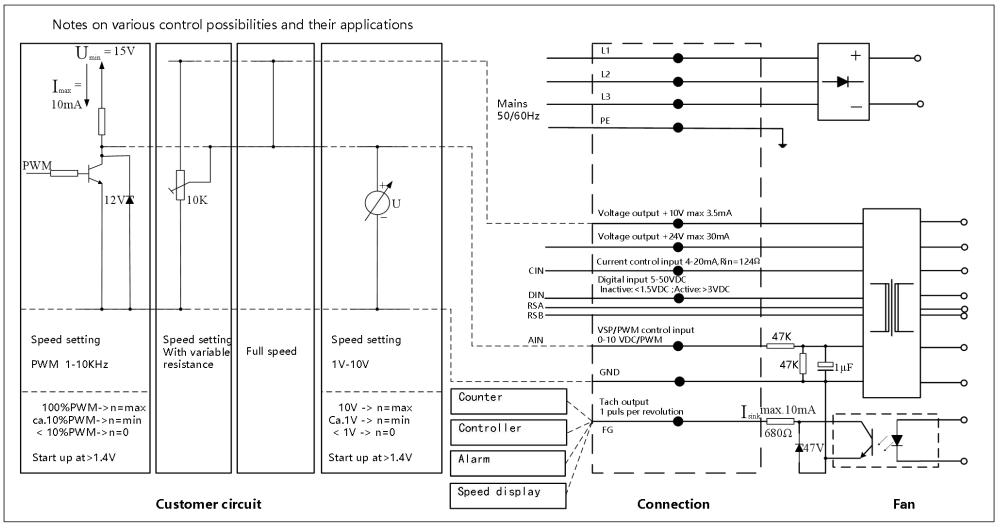

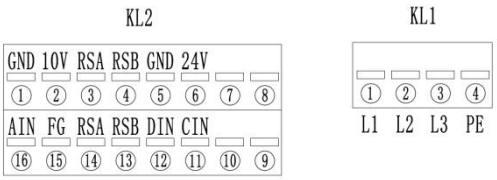

Terminal	NO.	Connection	Function
KL1	1	L1	电源相线，电压范围见铭牌 Power supply phase wire, voltage range, show on the nameplate
	2	L2	电源相线，电压范围见铭牌 Power supply phase wire, voltage range, show on the nameplate
	3	L3	电源相线，电压范围见铭牌 Power supply phase wire, voltage range, show on the nameplate
	4	PE	保护接地 Protective earth
KL2	1	GND	控制接口部分参考地 Reference ground for control interface
	2	+10V/max.3.5mA	电压输出，给外部设备提供电源 Voltage output, power supply for ext. device
	3	RSA	MODBUS 的 RS485 接口 A RS485 interface for MODBUS, RSA
	4	RSB	MODBUS 的 RS485 接口 B RS485 interface for MODBUS, RSB
	5	GND	控制接口部分参考地 Reference ground for control interface
	6	+24V/max.30mA	电压输出，给外部设备提供电源 Voltage output, power supply for ext. device
	11	Cin(4-20mA)	电流控制输入，测量值为 4~20mA，内阻 124 欧 Current control input, measured value 4-20mA, Rin=124ohm
	12	Din	数字量输入 5-50VDC 激活设备 有效电平：电压值＞3VDC；无效电平：电压值＜1.5VDC Digital input 5-50VDC activate electronics Active: voltage＞3VDC; Inactive: voltage＜1.5VDC
	13	RSB	MODBUS 的 RS485 接口 B RS485 interface for MODBUS, RSB
	14	RSA	MODBUS 的 RS485 接口 A RS485 interface for MODBUS, RSA
	15	FG	输出：1 脉冲/每转 Tach output: 1 pulse/revolution
	16	Ain (0-10V/PWM)	控制 0~10V 或 PWM 输入，内部阻抗为 100K Control input 0-10V or PWM, internal impedance 100K