

# A2 系列翼型 EC 后向离心风机 Φ250

# EC Centrifugal Fan-A2 Airfoil

# Backward Curved Φ250

版本号/Version number: V0

2024-11-16

## 额定数据 Nominal data

| | | |
|---|---|---|
| 型号 Type | EC102/50E3G01-B250/85A2-01-Z | |
| 成品品号 Finalized product quantity | / | |
| 相数 Phase | 1~ | |
| 额定电压 Rated voltage | VAC | 230 |
| 电压范围 Rated voltage range | VAC | 200 ~ 277 |
| 频率 Frequency | Hz | 50/60 |
| 转速 Speed (rpm) | $min^{-1}$ | 3500 |
| 功率 Power consumption | W | 900 |
| 电流 Current | A | 4.0 |
| 最低环境温度 Min. ambient temperature | ℃ | -25 |
| 最高环境温度 Max. ambient temperature | ℃ | 40 |

## ErP 能效数据 ErP Energy efficiency data

| | | 实际 Actual | 规定 2015 Req. 2015 |
|---|---|---|---|
| 整体效率$\eta_{es}$ Overall efficiency | % | 60.6 | 51.0 |
| 测量类别 Measurement category | | A | |
| 效率类别 Efficiency category | | 静态 Static | |
| 效率等级 N Efficiency grade N | | 71.6 | 62 |
| 转速调节 Variable speed drive | | 是 Yes | |

*注：此文件仅供选型参考，如您有任何疑问或需要进一步的技术支持，请随时与我们联系。

Please note that this document is intended solely for selection reference. Should you have any inquiries or require additional technical support, do not hesitate to reach out to us.

## 特性曲线及数据 Characteristic curve and data

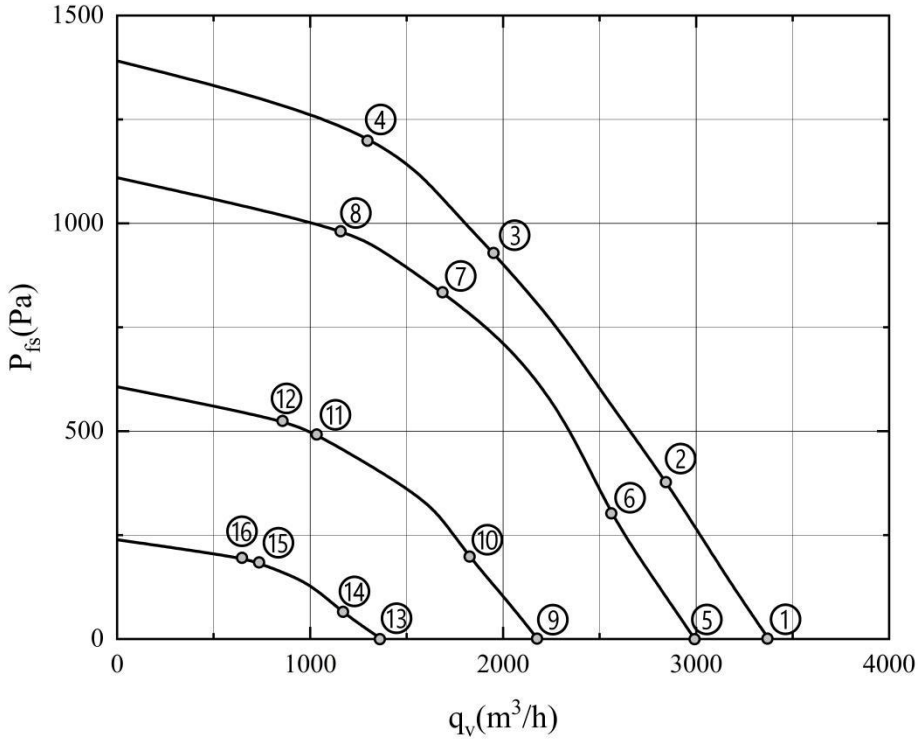


| | 电压 | 频率 | 转速 | 功率 | 电流 | 噪声 | 风量 | 静压 | 风量 |
|---|---|---|---|---|---|---|---|---|---|
| | Rated voltage | Frequency | Speed | Power | Curren | Noise | Air flow | Static pressure | Air flow |
| | U(V) | f(Hz) | n(r/min) | $P_{ed}$(W) | I(A) | $L_p$(dB(A)) | $q_v$($m^3$/h) | $p_{fs}$(Pa) | $q_v$(cfm) |
| 1 | 230 | 50 | 3500 | 880 | 3.8 | 89 | 3380 | 0 | 1989 |
| 2 | 230 | 50 | 3500 | 920 | 4.0 | 85 | 2850 | 380 | 1677 |
| 3 | 230 | 50 | 3500 | 905 | 3.9 | 82 | 1950 | 930 | 1148 |
| 4 | 230 | 50 | 3500 | 900 | 3.9 | 84 | 1340 | 1240 | 789 |
| 5 | 230 | 50 | 3230 | 620 | 2.7 | 85 | 3000 | 0 | 1766 |
| 6 | 230 | 50 | 3230 | 680 | 2.9 | 80 | 2560 | 300 | 1507 |
| 7 | 230 | 50 | 3230 | 710 | 3.1 | 77 | 1690 | 830 | 995 |
| 8 | 230 | 50 | 3230 | 630 | 2.8 | 78 | 1170 | 990 | 689 |
| 9 | 230 | 50 | 2380 | 260 | 1.2 | 77 | 2180 | 0 | 1283 |
| 10 | 230 | 50 | 2380 | 300 | 1.3 | 71 | 1830 | 200 | 1077 |
| 11 | 230 | 50 | 2380 | 290 | 1.3 | 69 | 1040 | 500 | 612 |
| 12 | 230 | 50 | 2380 | 270 | 1.2 | 72 | 860 | 530 | 506 |
| 13 | 230 | 50 | 1540 | 90 | 0.4 | 64 | 1370 | 0 | 806 |
| 14 | 230 | 50 | 1540 | 100 | 0.4 | 59 | 1170 | 70 | 689 |
| 15 | 230 | 50 | 1540 | 90 | 0.4 | 57 | 740 | 180 | 436 |
| 16 | 230 | 50 | 1540 | 90 | 0.4 | 60 | 650 | 200 | 383 |

## 技术说明 Technical description

| | | | |
|---|---|---|---|
| 净量 Net weight | | 10kg | |
| 毛重 Gross weight | | 12kg | |
| 包装尺寸 Package size | | 42.5cm*42.5cm*35cm | |
| 叶轮尺寸 Impeller size | | 250mm | |
| 电机尺寸 Motor size | | 102mm | |
| 转子表面 Rotor surface | | 黑色喷漆 Painted black | |
| 叶轮材料 Impeller material | | 铝制 Sheet aluminum | |
| 面板材料 Support plate material | | 钢制，镀锌 Sheet steel, galvanized | |
| 支架材料 Support bracket material | | 钢制，黑色喷漆 Sheet steel, painted black | |
| 导风圈材料 Inlet nozzle material | | 钢制，镀锌 Sheet steel, galvanized | |
| 叶片数量 Number of blades | | 7 | |
| 旋转方向 Direction of rotation | | CW（从转子端看）Viewed toward rotor | |
| 防护等级 Degree of protection | | IP54 | |
| 安装方式 Installation type | | 轴水平安装或转子向下安装<br>Shaft horizontal or rotor downward installation | |
| 绝缘等级 Insulation class | | F | |
| 储存环境温度 Storage temperature | | -40℃～+80℃ | |
| 运行模式 Mode | | S1 | |
| 振动 Vibration | | ≤ 4.6mm/s | |
| 动平衡 Dynamic balance | | G4.0 | |
| 轴承 Bearing | | 滚珠球轴承 Ball bearing | |
| 风机寿命 Life time | 时 Hour | 40,000 | 额定电压，风机全速运转，40℃环境<br>At nominal voltage, running at full speed, environment temperature 40℃ |
| 电磁兼容 EMC | | 工业级 Industrial | |
| 启动电压 Starting voltage | | 1V | |
| 电源线对地耐电压<br>Power line to ground withstand voltage | | DC2100V/1min | |
| 控制特点 Control characteristics | | 0-10 VDC / PWM 控制输入端<br>0-10 VDC / PWM speed regulation | |
| | | 输出端 10VDC，最大 3.5mA<br>Output terminal +10VDC, 3.5mA max | |
| | | 集成的 PID 控制器 Integrated PID controller | |
| | | 电机软件过热保护<br>Motor software overheat protection | |
| | | 软启动 Soft Start | |
| | | RS485 MODBUS-RTU | |
| | | 报警继电器 Alarm relay | |
| | | 低电压/相故障检测<br>Under volt/Phase failure protection | |

## 产品图纸　Product drawing

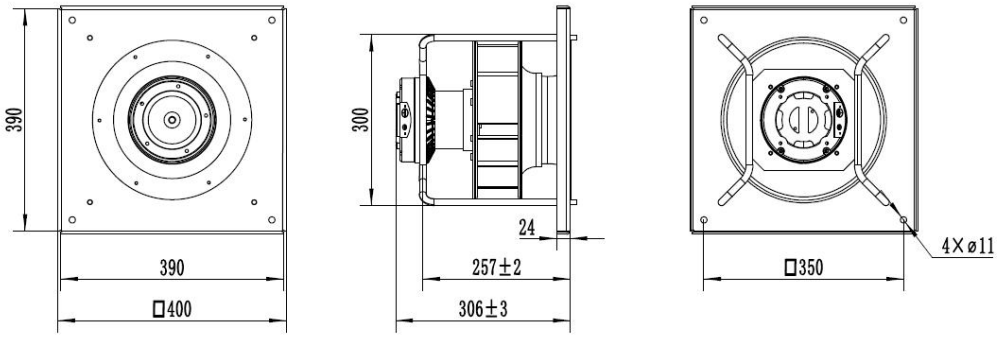


## 线路图 Connection diagram

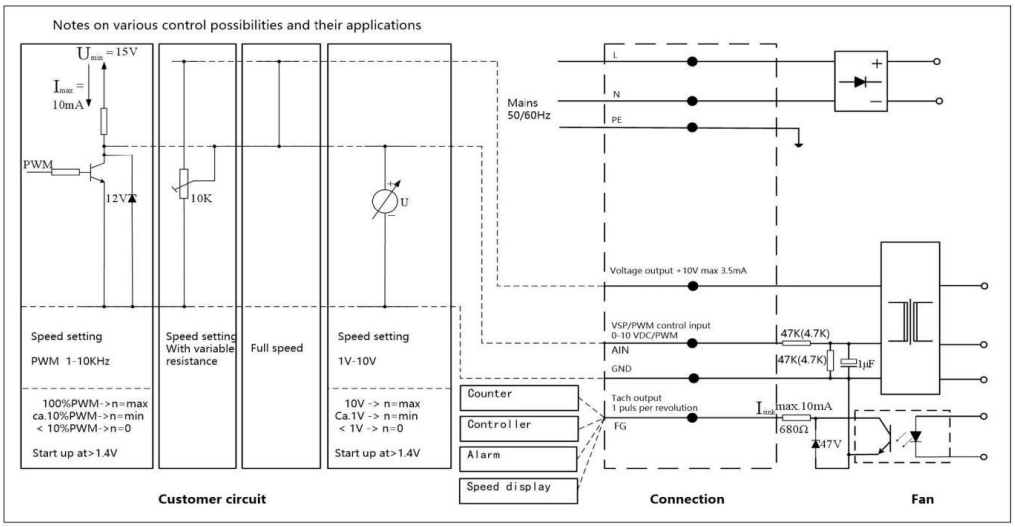




| Terminal | NO. | Connection | Function |
|---|---|---|---|
| KL1 | 1 | L | 电源相线，电压范围见铭牌<br>Power supply phase wire, voltage range, show on the nameplate |
| | 2 | N | 电源中性线，电压范围见铭牌<br>Power supply neutral wire, voltage range, show on the nameplate |
| | 3 | PE | 保护接地<br>Protective earth |
| KL2 | 1 | +10V/max. 3.5mA | 电压输出，给外部设备提供电源<br>Voltage output, power supply for ext. device |
| | 2 | AIN(0-10V/ PWM) | 控制0-10V或PWM输入，内部阻抗为10K<br>Control input 0-10V or PWM, internal impedance 10K |
| | 3 | GND | 控制接口部分参考地<br>Reference ground for control interface |
| | 4 | FG | 输出：1脉冲/每转<br>Tach output: 1 pulse/revolution |