产品规格书

PRODUCT SPECIFICATION

客户名称 Customer	
产品名称 Name	**EC 离心风机 EC centrifugal fan**
产品型号 Model	**EC092/25E3G01-B280/50S1-01**
产品版本 Version	**V0**

编制： 审核： 批准：

Edit _____ Auditing __Li Bo_____ Approval ___Liu Haiping__

公司名称: 杭州微光电子股份有限公司 地址：中国杭州市临平经济技术开发区兴中路 365 号，邮编：311100

Company Name: Hangzhou Weiguang Electronic Co.,Ltd Add: No.365 Xingzhong Road, Linping Region, Hangzhou 311100, China

http://www.wgmotor.com

换版记录/Records of revision

版本号 Revision no.	换版原因 Reason for revision	修订内容 Contents	姓名 Revised by	日期 Date
V0	/	/		

总则 General

本规格书主要描述 EC 后向离心风机的技术数据、机械性能、电气性能、环境与试验、特性曲线、外形图、接线示意图和使用注意事项等。

执行标准：

- GB 12350--2009 《小功率电动机的安全要求》
- GB/T 21418-2008 《永磁无刷电动机系统通用技术条件》
- JB/T 10563-2006 《一般用途离心通风机技术条件》

This specification defines the general data, mechanical, electrical characteristics, environment and experiment, performance curve, Outline Drawing and precautions of the EC brushless external rotor motorized backward curved centrifugal fan and so on.

Standard：

- GB 12350-2009 《Safety requirements of small power motors》
- GB/T 21418-2008 《General specification for permanent magnet brushless motor system》
- JB/T 10563-2006 《General technical requirement for general centrifugal fan》

一．额定参数 General Data

No.	名称 Name	参数 Parameter
1.1	额定电压 V Rated Voltage	230VAC
1.2	频率 Hz Frequency	50/60Hz
1.3	额定转速 r/min Rated Speed	2350
1.4	额定电流 A Rated Current @Max ηst	1.4
1.5	额定功率 W Input Power @Max ηst	200
1.6	静压 Pa Static Pressure@Max ηst	350
1.7	风量 m^3/h Air Flow@Max ηst	910
1.8	噪音 dB(A) Lp Noise Level (Free State)	≤68
1.9	静压效率 Max ηst(%) Static Pressure Efficiency	44.2
1.10	能效值 N62 Energy Efficiency Value N	68.4

二．主要工况点运行参数 Main operating points Parameters

No.	名称 Name	参数 Parameter
2.1	最大压力 Pa Max Static Pressure	580
2.2	功率 W Power @Max pst	190
2.3	电流 A Current @Max pst	1.4
2.4	转速 r/min Speed @Max pst	2550
2.5	风量 m^3/h Air Flow@Max pst	350
2.6	噪音 dB(A) Noise Level@Max pst	/
2.7	最小静压 Pa Min Static Pressure	0
2.8	功率 W Power@Min pst	180
2.9	电流 A Current@Min pst	1.3

2.10	转速 r/min Speed@Min pst	2800
2.11	风量 m^3/h Air Flow@Min pst	1890
2.12	噪音 dB(A) Noise Level@Min pst	/

三．基本要求 Basic requirements

No.	名称 Name	参数 Parameter
3.1	防护等级 IP Class	IP44
3.2	绝缘等级 Insulation Class	F
3.3	电源线对地耐电压 Power line to ground withstand voltage	DC2100 V/1min
3.4	电源线对控制线耐电压 Power line to control line withstand voltage	DC2100 V/1min
3.5	控制线对地耐电压 Control line to ground withstand voltage	DC2100 V/1min
3.6	绝缘电阻 Insulation Resistance	≥50MΩ
3.7	接地电阻 Grounding Resistance	≤0.1Ω
3.8	电磁兼容 EMC	☑工业级 Industrial 口家用级 household
3.9	认证 Certification	CE
3.10	风机寿命/Life time 时/Hour	40,000 额定电压下，20℃环境时，风机全速运转。 At nominal supply voltage, environment temperature 20℃，running at full speed。

四．机械性能 Mechanical

No.	名称 Name	参数 Parameter
4.1	外形及安装尺寸 Dimension	(见图 See dimension drawing)
4.2	叶片材料 Material of Blades	DX51
4.3	叶 片 数 Number of Blades	11
4.4	叶轮底盘 Impeller Plate	/
4.5	叶片颜色 Impeller Color	银白色 Silver
4.6	表面处理 Surface Coat	/
4.7	轴承油脂 Bearing Grease	耐温 -40~180℃ Temperature Resistance -40~180℃
4.8	振动 Vibration	≤ 4.6mm/s
4.9	动平衡 Dynamic Balance	G4.0

五．控制器及保护 Controller and Protection

No.	名称 Name	参数 Parameter
5.1	工作电压 Operating Voltage	200~277 VAC
5.2	主动式功率因数校正 APFC	口 Y ☑N
5.3	电机控制方式 Motor Control Method	☐ FOC ☑Sensorless FOC 口 PWM

5.4	控制器保护 Controller Protection	☑欠压 Undervoltage ☑过压 Overvoltage ☑过流 Overcurrent 口进线缺相
5.5	电机保护 Motor Protection	☑限流 Current limiter ☑ 限速 Speed limiter ☑ 限功率 Power limiter ☑ 温度 Temperature ☑堵转 Locked rotor ☐ 缺相 Lack of Phase
5.6	电机起动 Motor Start	☑软启动/ Soft Start ☑自动重启/Automatic Restart ☑低速逆风起动/ Low Speed Headwind Start ☑带速顺风起动/ Start With Speed Downwind
5.7	风机控制方式 Fan Control Mode	☑速度/ Speed 口扭矩/Torque 口功率/Power
5.8	调节范围 Adjustment Range	30%~100%
5.9	调节控制功能 Adjustment control function	☑Vsp:0~10 V ☑PWM 口 4~20mA 口 RS485
5.10	Vsp 起动电压 Vsp starting voltage	1 V
5.11	FG 反馈信号 Signal Feedback	1 pulses / r，OC 门输出(Open Collector Output) 上拉电阻(Internal pull-down resistance)R≥10kΩ
5.12	辅助电压输出 Auxiliary Voltage Output	+10VDC, 3.5mA max

六、特性曲线和铭牌标志 Performance Curve And Nameplate drawing

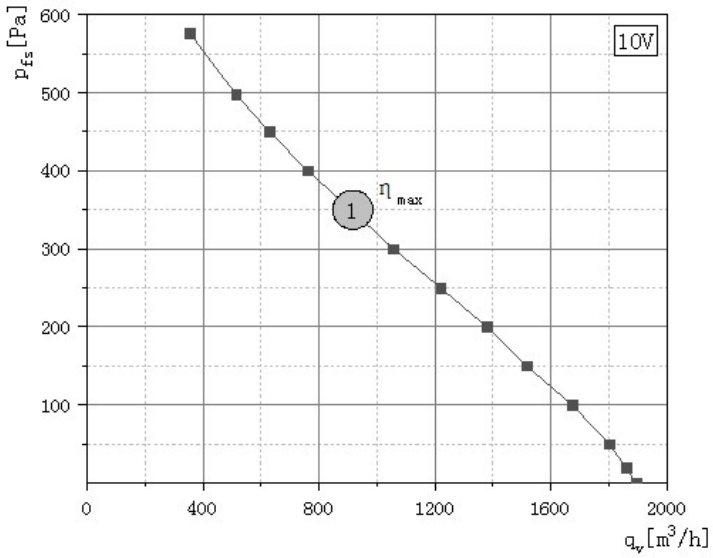



自由状态下参数	电压 v	频率 Hz	电流 A	功率 W	转速 r/min
free air	Voltage	Frequency	Current	Power	Speed
Parameters	**230**	**50/60**	**1.37±10%**	**200±10%**	**2700±10%**

七．外形图 Outline Drawing

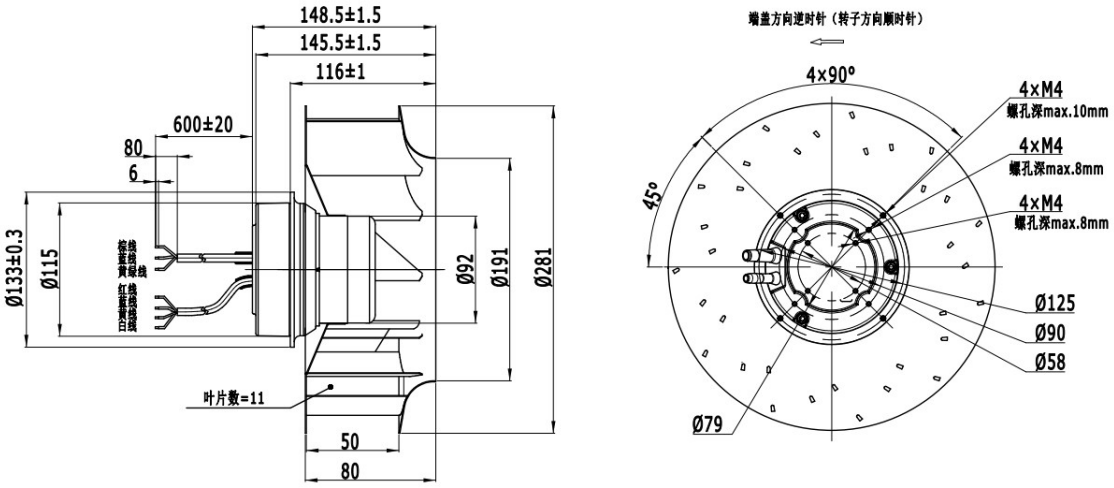

八．接线及控制特性 Connection and Control Characteristics

(1).接线示意图 Wire diagram：

	Color	Illustrate	
Power	Green/Yellow	Ground	L=0.6m
	Brown	50Hz/60Hz (200~277V)	
	Blue		
Control	Red	+10V suply	3.5mA max
	Yellow	VSP: 0~10V	10V-PWM
	Blue	0V	
	White	FG output	1 pulses/r

(2).控制特性 Control Characteristics：

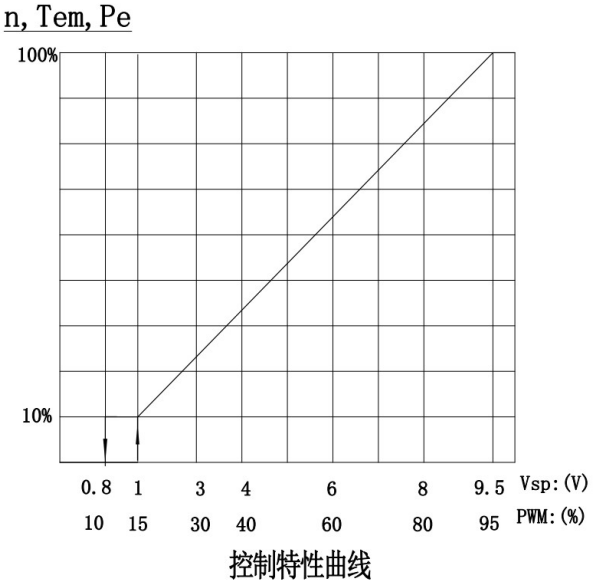

控制特性曲线

九、使用及包装 Usage and Packaging

No.	名称 Name	参数 Parameter
9.1	使用环境温度 Operating Temperature	-25℃ to 60℃
9.2	储存环境温度 Storage Temperature	-40℃ to 75℃
9.3	使用环境湿度 Operating Humidity	5% to 90% RH
9.4	储存环境湿度 Storage Humidity	5% to 95% RH
9.5	净　　重　Net Weight	/ kg
9.6	毛　　重　Gross Weight	/ kg
9.7	纸箱尺寸　Carton Size	/
9.8	包装方式　Package	纸箱+防震材料+木制托盘。 Carton with shock- absorption material, put on pallet

十．使用注意事项 Precautions

1. 通电前，请将风机固定牢固并做好个人防护，防止风机晃动叶片旋转伤及人体。
2. 请勿打开接线盒盖，防止残余高压电伤人，也会影响电机的防水性能和电气安全。
3. 风机黄绿双色线必须有效接地才能通电运行，防止未接地而导致触电或影响运行。
4. 风机的控制线蓝色 0V 控制线与外部上位机直流电源负极相连，切勿接错，损坏控制回路。其它控制线对蓝色 0V 控制线的外加电压不允许高于 DC +15V。
   白色 FG 信号线为集电极 OC 输出，禁止直接与任何电源正极相连接。需要经不小于 10k 欧的电阻与红色+10VDC 辅助电压输出线或外部上位机低压直流电源正极上拉，获取方波转速信号输出。
   红色+10VDC 辅助电压输出线负载超过 3.5mA 时，可能造成永久性损坏。
5. 风机有延时启动和重启功能，如果通电后风机不运转，请先切断电源，再检查电源线和控制线是否正常连接、调速电压值是否满足启动要求、检查叶轮旋转是否有机械障碍。确认无误后，再通电运行。防止风机突然启动引起人身伤害或其他伤害。
6. 风机内部与机壳连接有 EMC 电磁兼容器件，安全耐电压试验时须采用直流 DC 耐压仪。
7. 使用产品前请仔细阅读本《技术规格书》。

Notes:

1. Before connect with power, please fix the fan firmly and provide personal protection to prevent the human body from the damaging caused byfan shaking and blade rotation .
2. Do not open the connection box cover to prevent residual high-voltage electricity from hurting people, and it also affect the waterproof performance and electrical safety of the motor.
3. The fan shall be operated when the yellow - green wire of the fan connect the ground effective, to prevent electric shock or affect operation due to ungrounded.
4. The blue 0V control line of the fan is connected to the negative pole of the DC power supply of the external host computer. Do not connect it wrongly and damage the control circuit. The applied voltage of other control lines to the blue 0V control line is not allowed to be higher than DC +15V. The white FG signal line is the collector OC output, and it is forbidden to directly connect with the positive pole of any power supply. It is necessary to pull up the positive pole of the low-voltage DC power supply of the external host computer

through the resistance of not less than 10k ohms and the red +10VDC auxiliary voltage output line or the positive pole of the low-voltage DC power supply of the external host computer to obtain the square wave speed signal output.When the red +10VDC auxiliary voltage output line load exceeds 3.5mA, it may cause permanent damage.

5. The fan has delayed start and restart functions. If the fan does not run after the power is turned on, please cut off the power first, and then check whether the power line and the control line are connected normally, whether the speed regulating voltage value meets the starting requirements, and whether there is any mechanical obstacle to the rotation of the impeller. After confirming that it is correct, power on and run again. Prevent personal injury or other injury from sudden start of the fan.
6. There is an EMC electromagnetic compatibility device connected between the inside of the fan and the casing, and a DC withstand voltage tester must be used for the safety withstand voltage test.
7. Please read the "Technical Specification" carefully before use the product.