DRAWING NO		REV.	A0

forward centrifugal fans

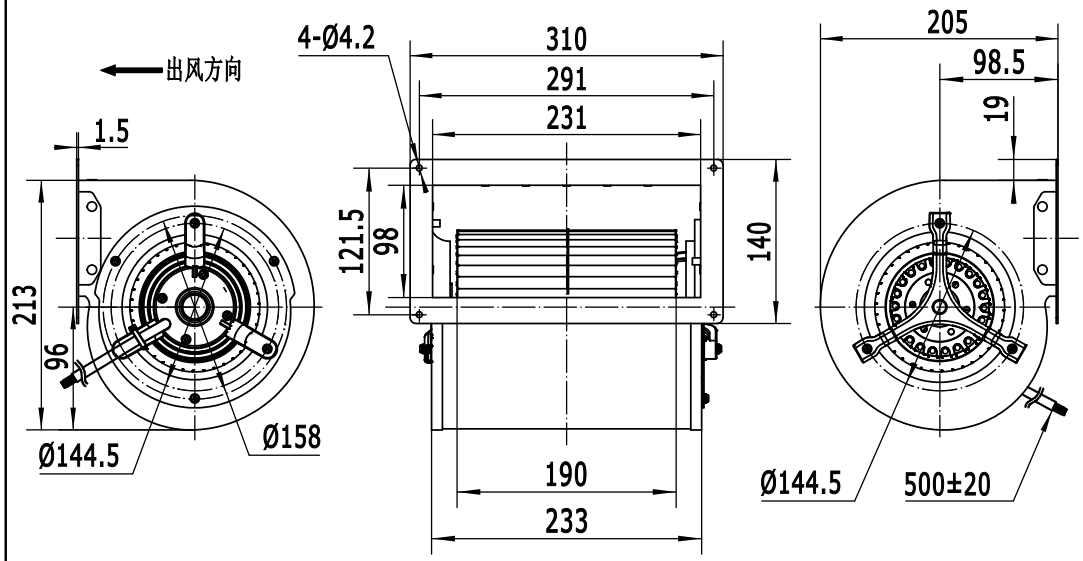

Hangzhou Weiguang Electronic Co.,Ltd.	
Unit: External Rotor Motor	Type:
Type:LXFFD2E146/190-M92/45-G232	Customer:

Voltage v	Frequency Hz	Input power W	Current A	Speed r/min +/-5%	Notice
220	50	290	1.35	1450	

Insulation class : F	Operating type: S_1
Permissible ambient temperature : -30℃~+60℃	Temperature increase: ΔT≤92k
Bearings: ball bearings	

Model meanings:

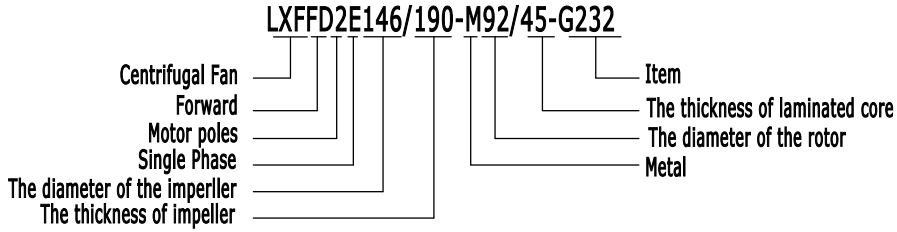

WEIGUANG® LXFFD2E146/190-M92/45-G232
220V 50Hz 1.35A 135/290W 1450r/min
8μF/450V CL.F XX/XX

WIRING DIAGRAM

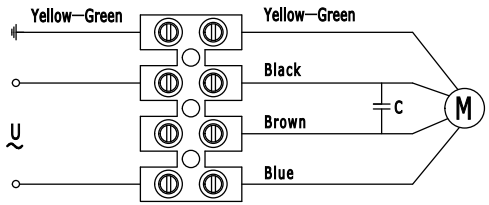

Airflow curves

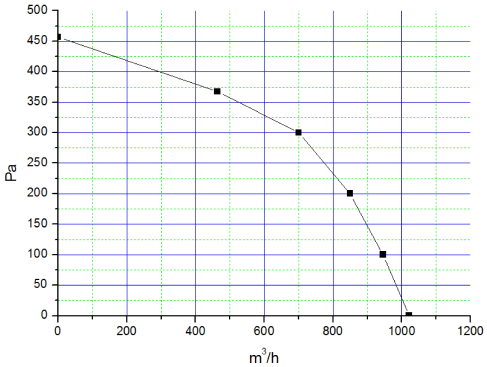

1、Electrical connection:lead wire , Length 500mm 。

2、Bearing: 608ZZ。

				DECIMAL	TOLERANCE		SIGN	DATE
				X	±0.5	DRN.BY	chunboliu	08/31-22
				X.X	±0.25	CHD.BY		
				X.XX	±0.15	ENG.BY		
REV.	DESCRIPTION	APPROVED	DATE	ANGLE	±3°	APP.BY		

TITLE: LXFFD2E146/190-M92/45-G232

PROJECTION

A0
SCALE: 1:1.5
SHEET:1of1