DRAWING NO		REV.	A0

External Rotor Motor

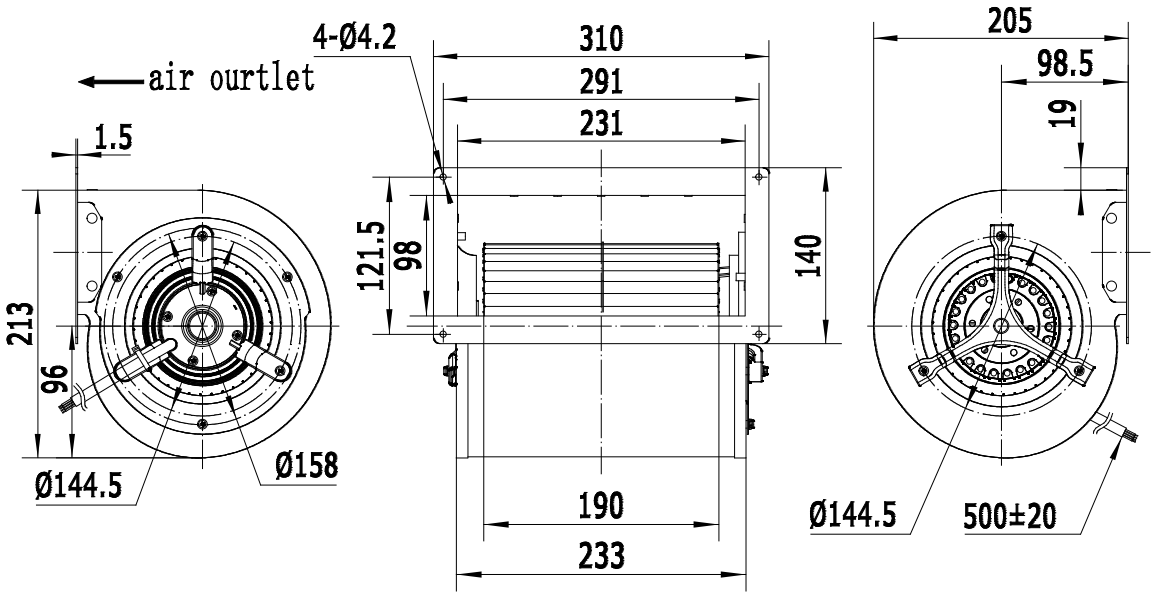

Hangzhou Weiguang Electronic Co.,Ltd.						
Unit: External Rotor Motor				Type:		
Motor: Single phase motor				Customer:		
Motor type: LXFFD2E133/190-M92/45-A232				Customer-type:		
Voltage V	Frequency Hz	Input power W	Current A	Speed r/min	Capacitor μF/ V_{AC}	Remarks
220	50	300	1.38	1800	8	No load
Insulation class : F				Operating type: S_1		
Permissible ambient temperature : -30℃~60℃				Temperature increase:		
Motor protection:thermocontact 150±5℃				Bearings: ball bearings		

WEIGUANG® LXFFD2E133/190-M92/45-A232

220V 50Hz 1.38A 135/300 1800r/min 8uF/450V CL.F XX/XX

Hangzhou Weiguang Electronic CO.,LTD.

CE

Airflow curves

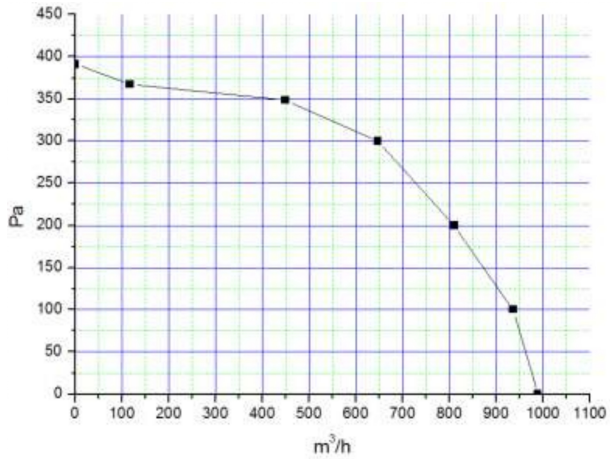

WIRING DIAGRAM

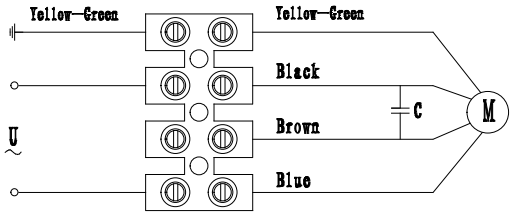

Model meanings:

LXFFD2E 133/190-M 92 /45- A232

- LXFFD2E: Centrifugal Fan, Forward, Motor poles, Single Phase
- 133: The diameter of the imperller
- 190: The thickness of impeller
- M: Metal
- 92: The diameter of the rotor
- 45: The thickness of laminated core
- A232: Item

Electrical connection:lead wire Length 500±20mm.

							SIGN	DATE
				X	±0.5	DRN.BY		
				X.X	±0.25	CHD.BY		
				X.XX	±0.15	ENG.BY		
REV.	DESCRIPTION	APPROVED	DATE	ANGLE	±3°	APP.BY		

TITLE: LXFFD2E133/190-M92/45-A232

PROJECTION

A4

SCALE

SHEET: 1 of 1