DRAWING NO		REV.	A0

forward centrifugal fans

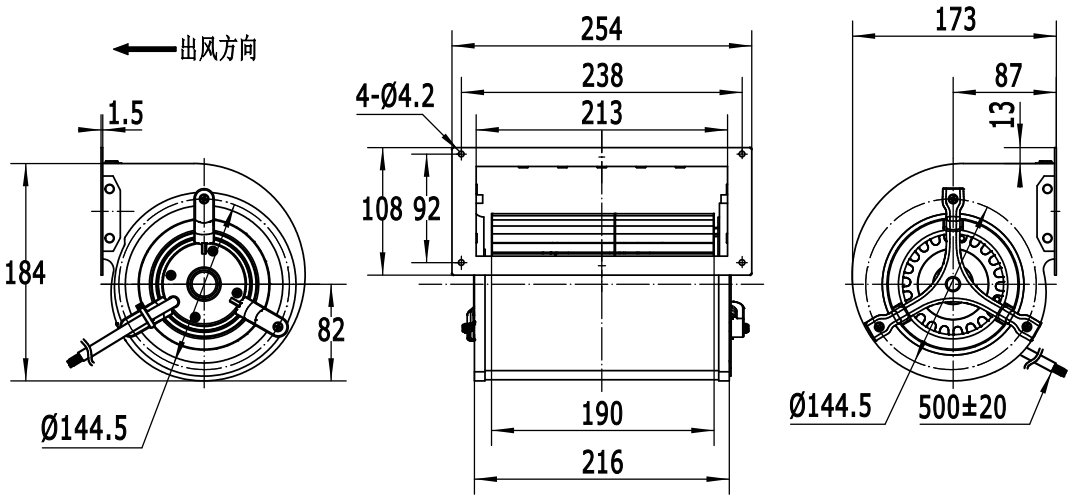

Hangzhou Weiguang Electronic Co.,Ltd.							
Unit: External Rotor Motor					Type:		
Type:LXFFD2E133/190-M92/35-G215					Customer:		
Voltage v	Frequency Hz	Input power W	Current A	Speed r/min +/-5%	Notice		
220	50	255	1.15	1850			
Insulation class : F					Operating type: S_1		
Permissible ambient temperature : -30℃～+60℃					Temperature increase: ΔT≤92k		
Bearings: ball bearings							

Model meanings:

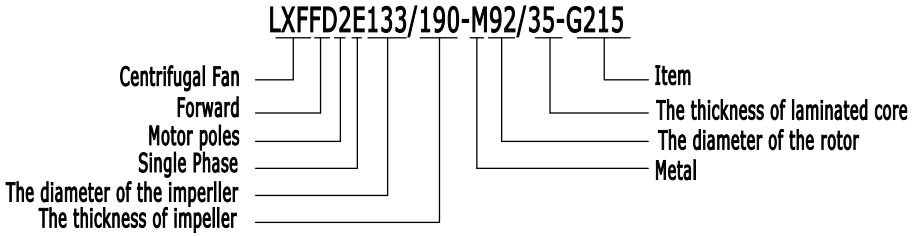

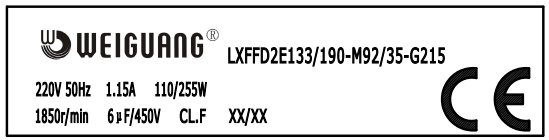

WIRING DIAGRAM

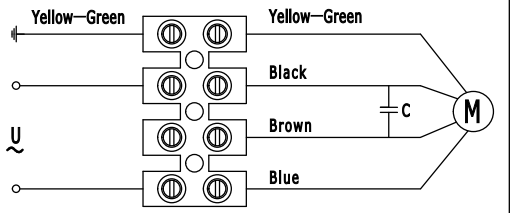

Airflow curves

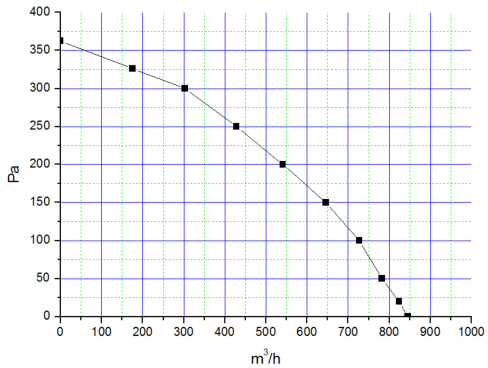

1、Electrical connection:lead wire，Length 500mm 。

2、Bearing: 608ZZ。

				DECIMAL	TOLERANCE		SIGN	DATE	TITLE
				X	±0.5	DRN.BY	chunboliu	08/31-22	LXFFD2E133/190-M92/35-G215
				X.X	±0.25	CHD.BY			
				X.XX	±0.15	ENG.BY			PROJECTION A0
REV.	DESCRIPTION	APPROVED	DATE	ANGLE	±3°	APP.BY			SCALE: 1:1.5
									SHEET:1of1