DRAWING NO		REV.	A0

External Rotor Motor

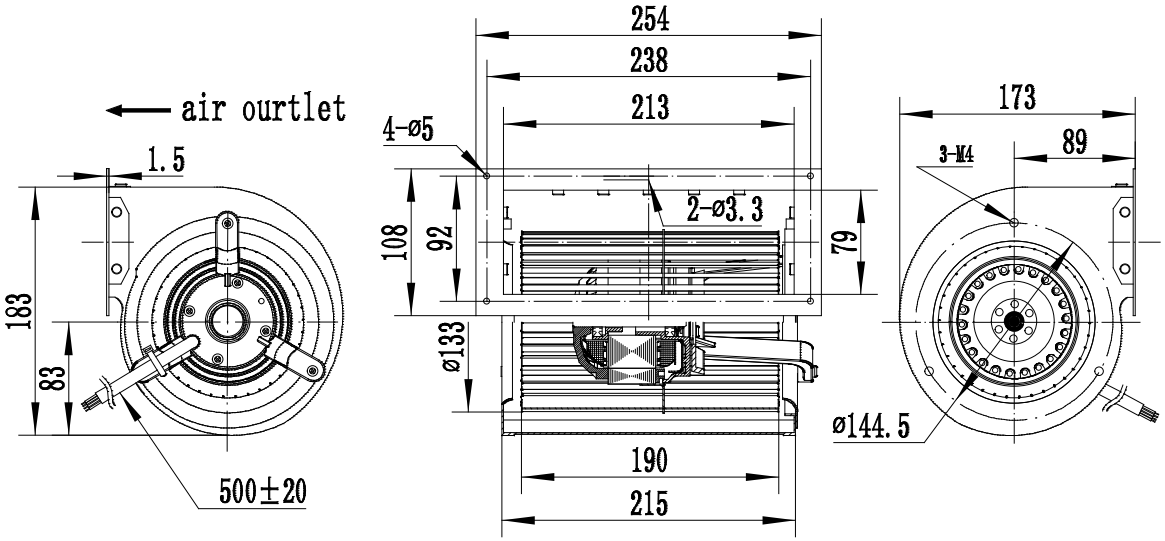

Hangzhou Weiguang Electronic Co.,Ltd.						
Unit: External Rotor Motor				Type:		
Motor: Single phase motor				Customer:		
Motor type: LXFFD2E133/190-M92/35-D215				Customer-type:		
Voltage V	Frequency Hz	Input power W	Current A	Speed r/min	Capacitor μF/ V_{AC}	Remarks
220	50	242	1.09	1720	6	No load
Insulation class : F				Operating type: S_1		
Permissible ambient temperature : -30℃~60℃				Temperature increase:		
Motor protection:thermocontact 150±5℃				Bearings: ball bearings		

WEIGUANG® LXFFD2E133/190-M92/35-D215

220V 50Hz 1.09A 100/242 1720r/min 6uF/450V CL.F XX/XX

Hangzhou Weiguang Electronic CO.,LTD.

WIRING DIAGRAM

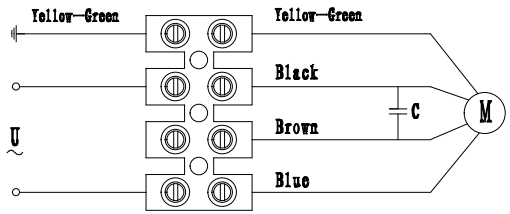

Airflow curves

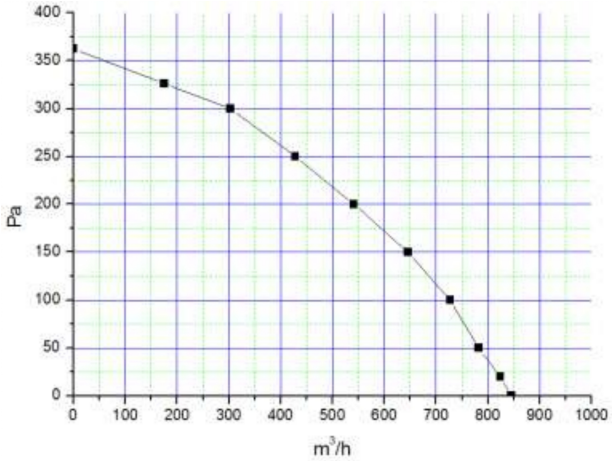

Model meanings:

LXFFD2E 133/190-M 92 /35- D215

- LXFFD2E — Centrifugal Fan
- Forward
- Motor poles
- Single Phase
- 133/190 — The diameter of the imperller / The thickness of impeller
- M — Metal
- 92 — The diameter of the rotor
- 35 — The thickness of laminated core
- D215 — Item

Electrical connection:lead wire Length 500±20mm.

							SIGN	DATE
				X	±0.5	DRN.BY		
				X.X	±0.25	CHD.BY		
				X.XX	±0.15	ENG.BY		
REV.	DESCRIPTION	APPROVED	DATE	ANGLE	±3°	APP.BY		

TITLE: LXFFD2E133/190-M92/35-D215

PROJECTION

A4

SCALE

SHEET: 1 of 1