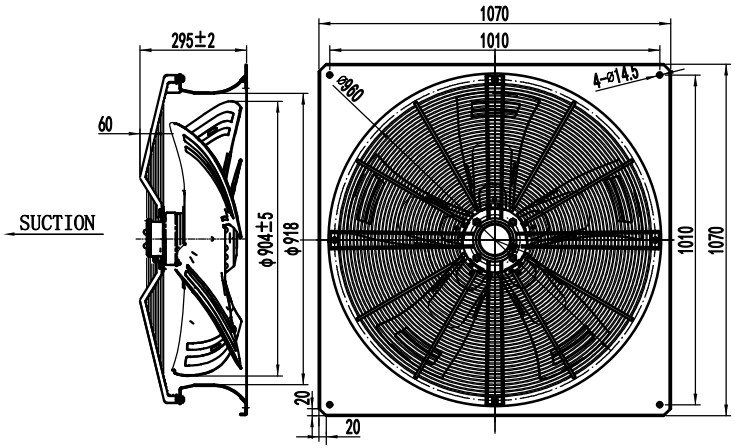

Wiring diagram:

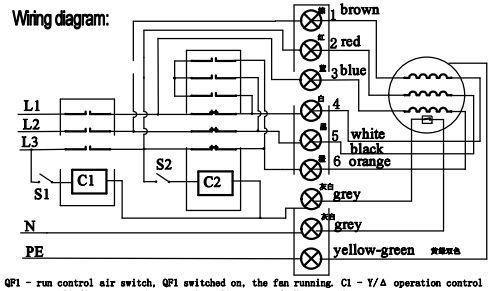

QF1 - run control air switch, QF1 switched on, the fan running. C1 - Y/Δ operation control contactor, S1 disconnect, Δ connection: S1 connected, Y connection.

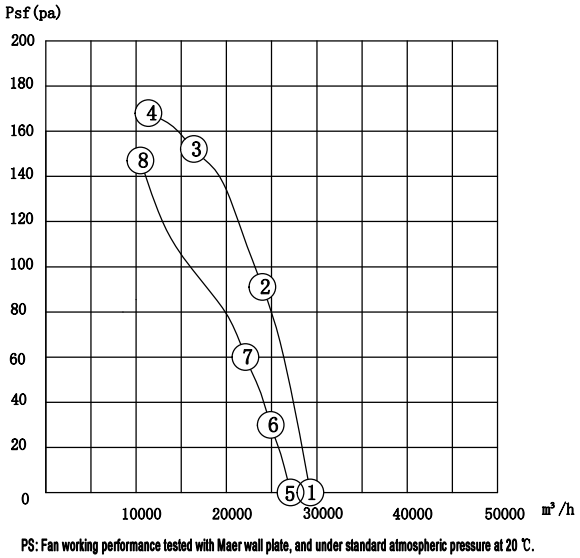

PS: Fan working performance tested with Maer wall plate, and under standard atmospheric pressure at 20 ℃.

Performance parameters at key point:

	psf	I	P1	n	Q	Note
△	(pa)	(A)	(W)	(r/min)	(m^3/h)	
①	0	4.50	2207	907	29286	
②	91	4.85	2476	892	24020	
③	130	4.98	2579	886	20437	MAX EFF.
④	168	5.01	2565	888	11382	IMAX
Y						
⑤	0	2.94	1679	801	27113	
⑥	30	3.15	1800	781	24896	
⑦	89	3.54	2013	734	18199	MAX EFF.
⑧	147	3.76	2132	707	10453	IMAX

Test data at free :

connection	UAC (V) ±5%	f (Hz)	P1 (W) ±10%	I (A) ±10%	n (r/min) ±10%	Noise dB(A)
△	3~380	50	2476	4.85	892	77
Y	3~380	50	1908	3.35	760	75

Nameplate:

YSWF138L118P6-1010H-900 S 3~380V/50Hz
△: 2579W 4.98A 886r/min @ 130Pa
Y: 2013W 3.54A 734r/min @ 89Pa
CL.F IP54 2022/07

Product model	YSWF138L118P6-1010H-900 S
product type	External rotor axial flow fan
customer code	/
Product number	/
certification	CE,CCC

MAER

Condition of use:

1) voltage and frequency: △/Y 3~ 380 V ±5 % 50 Hz。
2) Lead cable:Terminal block, the recommended standard of lead wire is not less than 1 mm².
3) Installation position: vertical or upward.
4) ambient temperature:-40~50℃。

The external wiring diagram:

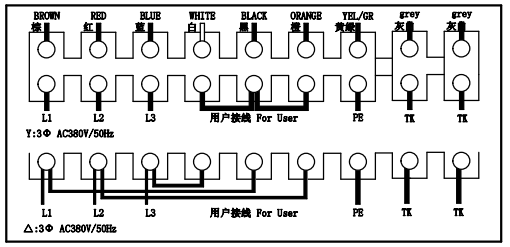

Mark

MAER MOTORS & FANS AXIAL FAN MOTOR

MODEL: YSWF138L118P6-1010H-900 SUCTION
VOLTAGE: △/Y3~380V/50Hz
N.W/G.W. / KG
MEAS: 108X108X31 CM
CL.F WITH TERMINAL BOX
XXXXXXXX

Technical specification:

1.All parts of fan should be properly assembled, no oil or dirt on the surface, no obvious distortion, mechanical damage and other defects.
2.Fan rotation is flexible, no delay, no operation sound, no scratch and other undesirable phenomena.
3.The safety requirement of fan is performed according to GB12350-2009, the electrical strength is 1800V•S, and the insulation resistance is not less than 100MΩ at room temperature.
4.Motor insulation class, F CLASS.
5.Motor protection level, IP54, fan protection level, IP2X.
6.The fan balance level is:892±10%r/min high than G6.3,vibration value is less than 3mm/s.
7. Plastic fan blade.
8. 900 flanging wind guide ring, 900 flanging wind guide ring net cover H95-M138.
8.External thermal protector.
9.With terminal block, box with foam.
10.English trademark.
11.With TPI bearing.

版本/Ver.		Page			
重量/WG.	Kg	签名/Name	日期/Date	浙江马尔风机有限公司 MAER Fan Motor ZHEJIANG MAER FAN MOTOR CO.,LTD.	
绘图/Drawing				产品规格书 Product Specification	
审核/Checked					
批准/Approved				型号/Model	YSWF138L118P6-1010H-900 S
客户确认/Customer confirmation				品号 P/N	