PT

Movement by Perfection

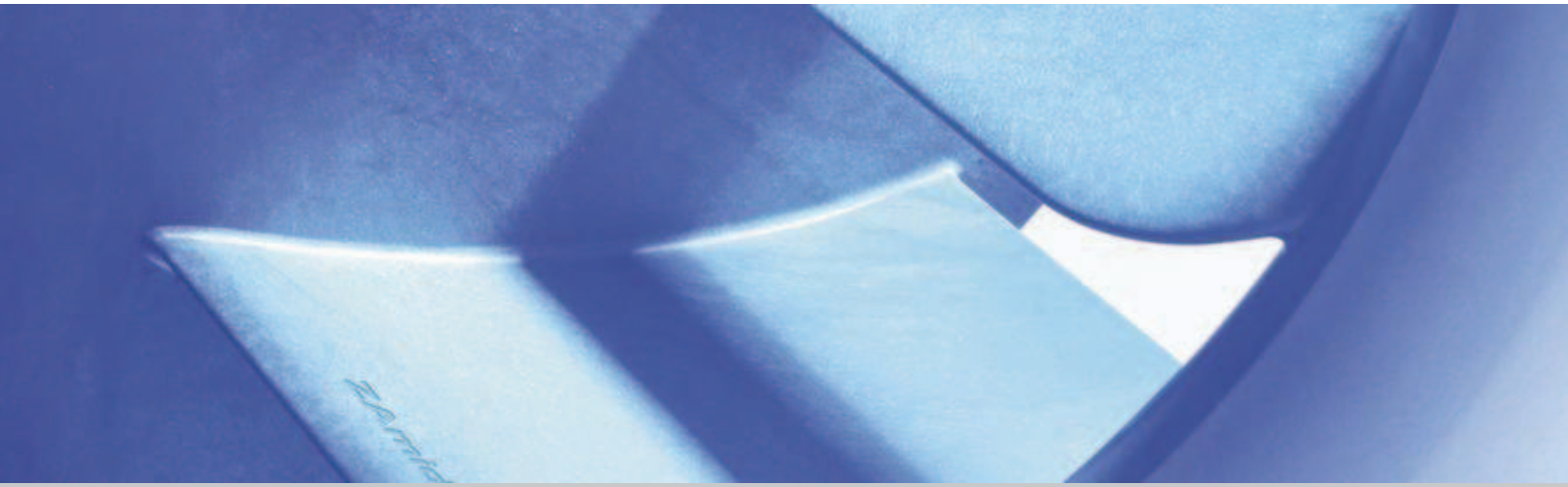

The Royal League in **ventilation**, control and drive technology



Product documentation

Type
RH28M-2EK.3F.1R

Article number
125797

ZIEHL-ABEGG

1. Product specification

Technical data

Article number	
Type	RH28M-2EK.3F.1R
Designation	Single inlet impeller with backward curved blades.
Rated values	1~230V ±15% Y 50Hz P_1 0.59kW 70°C 2.6A 2680/min 12 µF/400V 1~230V ±15% Y 60Hz P_1 0.70kW 70°C 3.3A 2550/min 12 µF/400V
Electrical connection	Supply cable side, 6x 1,0mm2 x 55cm
Min. operating temperature [°C]	-40
Cable quality	SC 500 HDTR
Painting stator	_xx
coating rotor	_xx
Material impeller	Impeller made of aluminium
Painting impeller	unpainted
Connection diagram	1360-159XA
Rating plate	1x fixed.
Installation position	H/Vu
Motor protection	thermal contact
Type of protection	IP10
Thermal class	Thermal class 155
Balancing	6,3
Quality of bearings	ball bearing with long-time lubrication
Field of application	Conceived for individual application in
Labelling UL/CSA	MK092-2EK.10.U
Certification	Motor-Recognized Component
Other	All attaching parts secured with Loctite.
Weight kg	7,20
ErP Data	Efficiency η_{statA}: 48.7 % Efficiency: N_{actual} = 62.0 / N_{target} = 62* *ErP 2015

© ZIEHL-ABEGG SE TPL_PG_Datenblatt-V6-10 Release Date: 08.02.2013 Technical changes reserved

All rights reserved. Confidential and proprietary document, not to be disclosed or used except in accordance with applicable agreements. No disclosure to third parties, if not expressively agreed by ZA SE.

2. Characteristic Curve

Air performance

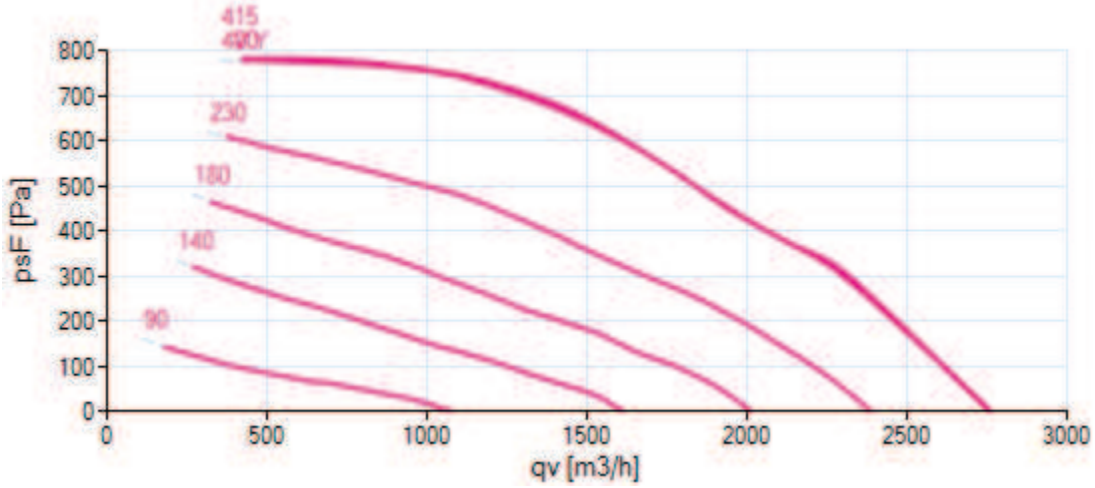

Acoustics

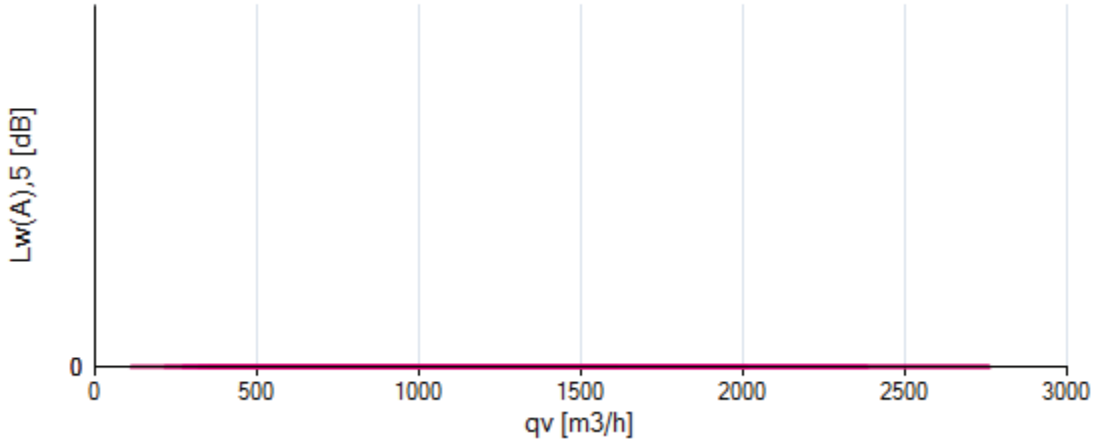

Power input

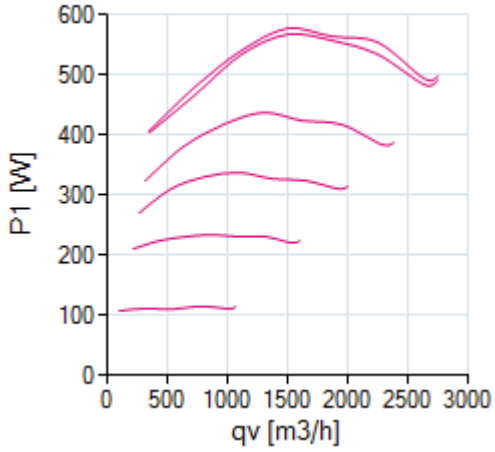

Efficiency

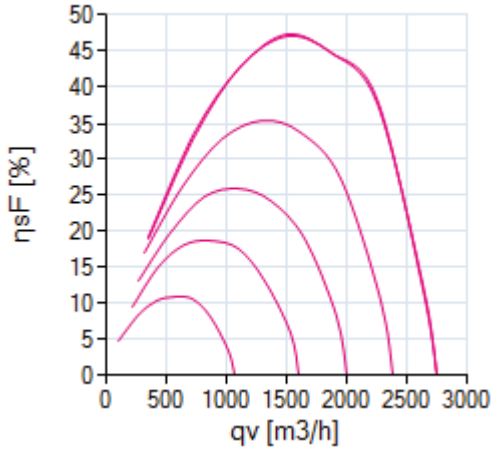

P H D V X U H G L Q V W D L G D W D G O D R W L H H L Q S H $ D F F R U G L Q J W

© ZIEHL-ABEGG SE TPL_PG_Datenblatt-V6-10 Release Date: 08.02.2013 Technical changes reserved

All rights reserved. Confidential and proprietary document, not to be disclosed or used except in accordance with applicable agreements. No disclosure to third parties, if not expressively agreed by ZA SE.

3. Drawing

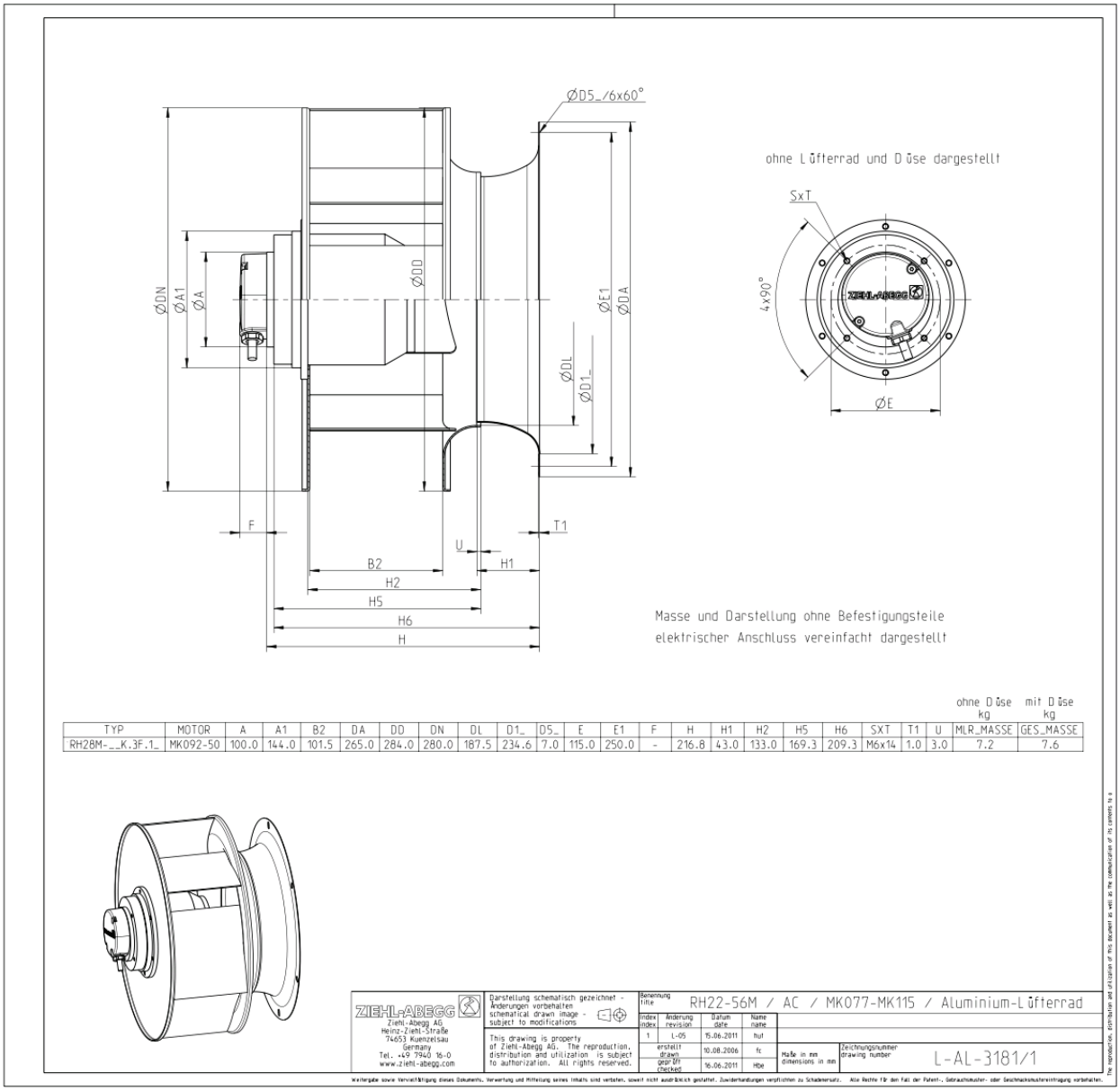

TYP	MOTOR	A	A1	B2	DA	DD	DN	DL	D1_	D5_	E	E1	F	H	H1	H2	H5	H6	SXT	T1	U	ohne Düse kg MLR_MASSE	mit Düse kg GES_MASSE
RH28M-__K.3F.1_	MK092-50	100.0	144.0	101.5	265.0	284.0	280.0	187.5	234.6	7.0	115.0	250.0	-	216.8	43.0	133.0	169.3	209.3	M6x14	1.0	3.0	7.2	7.6

ZIEHL-ABEGG
Ziehl-Abegg AG
Heinz-Ziehl-Straße
74653 Künzelsau
Germany
Tel. +49 7940 16-0
www.ziehl-abegg.com

Darstellung schematisch gezeichnet - Änderungen vorbehalten
schematical drawn image - subject to modifications

This drawing is property of Ziehl-Abegg AG. The reproduction, distribution and utilization is subject to authorization. All rights reserved.

Benennung / Title: RH22-56M / AC / MK077-MK115 / Aluminium-Lüfterrad

Index	Änderung / revision	Datum / date	Name / name
1	L-05	15.06.2011	hut
erstellt / drawn		10.08.2006	fc
gepr. / checked		16.06.2011	Hbe

Maße in mm / dimensions in mm

Zeichnungsnummer / drawing number: L-AL-3181/1

Weitergabe sowie Vervielfältigung dieses Dokuments, Verwertung und Mitteilung seines Inhalts sind verboten, soweit nicht ausdrücklich gestattet. Zuwiderhandlungen verpflichten zu Schadenersatz. Alle Rechte für den Fall der Patent-, Gebrauchsmuster- oder Geschmacksmustereintragung vorbehalten.

The reproduction, distribution and utilization of this document as well as the communication of its contents to o

Dimensions in mm
Shown drawing is just to show the dimensions of the fan.

© ZIEHL-ABEGG SE TPL_PG_Datenblatt-V6-10 Release Date: 08.02.2013 Technical changes reserved

All rights reserved. Confidential and proprietary document, not to be disclosed or used except in accordance with applicable agreements. No disclosure to third parties, if not expressively agreed by ZA SE.