R4D355-AH11-09

AC centrifugal fan

backward curved, single inlet

ebm-papst Mulfingen GmbH & Co. KG
Bachmühle 2 · D-74673 Mulfingen
Phone +49 7938 81-0
Fax +49 7938 81-110
info1@de.ebmpapst.com
www.ebmpapst.com

Limited partnership · Headquarters Mulfingen
County court Stuttgart · HRA 590344

General partner Elektrobau Mulfingen GmbH · Headquarters Mulfingen
County court Stuttgart · HRB 590142

ErP2015 EXCEEDS THE NORM

Nominal data

Type	**R4D355-AH11-09**
Motor	**M4D074-EI**

Phase		3~	3~	3~	3~
Nominal voltage	VAC	230	230	400	400
Connection		Δ	Δ	Y	Y
Frequency	Hz	50	60	50	60
Type of data definition		fa	fa	fa	fa
Valid for approval / standard		CE	CE	CE	CE
Speed	min^{-1}	1400	1600	1400	1600
Power input	W	170	235	170	235
Current draw	A	0.90	0.87	0.52	0.50
Min. back pressure	Pa	0	0	0	0
Min. ambient temperature	°C	-25	-25	-25	-25
Max. ambient temperature	°C	70	65	70	65
Starting current	A	2.6	2.55	1.5	1.45

ml = max. load · me = max. efficiency · fa = running at free air · cs = customer specs · cu = customer unit
Subject to alterations

Data according to ErP directive

Installation category	A
Efficiency category	Static
Variable speed drive	No
Specific ratio*	1.00

* Specific ratio = 1 + p_{fs} / 100 000 Pa

		Actual	Request 2013	Request 2015
Overall efficiency η_{es}		44.8	40.8	44.8
Efficiency grade N		62	58	62
Power input P_e	kW	0.23		
Air flow q_v	m^3/h	1445		
Pressure increase p_{fs}	Pa	251		
Speed n	min^{-1}	1350		

Data established at point of optimum efficiency

ebmpapst

AC centrifugal fan

backward curved, single inlet

Technical features

Mass	4.9 kg
Size	355 mm
Surface of rotor	Coated in black
Material of impeller	Aluminium sheet, laser-welded
Number of blades	6
Direction of rotation	Clockwise, seen on rotor
Type of protection	IP 44
Insulation class	"F"
Humidity class	F1-2
Max. permissible ambient motor temp. (transp./ storage)	+ 80 °C
Min. permissible ambient motor temp. (transp./storage)	- 40 °C
Mounting position	Shaft horizontal or rotor on bottom; rotor on top on request
Condensate discharge holes	Rotor-side
Operation mode	S1
Motor bearing	Ball bearing
Touch current acc. IEC 60990 (measuring network Fig. 4, TN system)	< 0.75 mA
Motor protection	Thermal overload protector (TOP) brought out
Cable exit	Variable
Protection class	I (if protective earth is connected by customer)
Product conforming to standard	EN 60335-1; CE
Approval	CCC

ebm-papst Mulfingen GmbH & Co. KG · Bachmühle 2 · D-74673 Mulfingen · Phone +49 (0) 7938 81-0 · Fax +49 (0) 7938 81-110 · info1@de.ebmpapst.com · www.ebmpapst.com

AC centrifugal fan

backward curved, single inlet

Product drawing

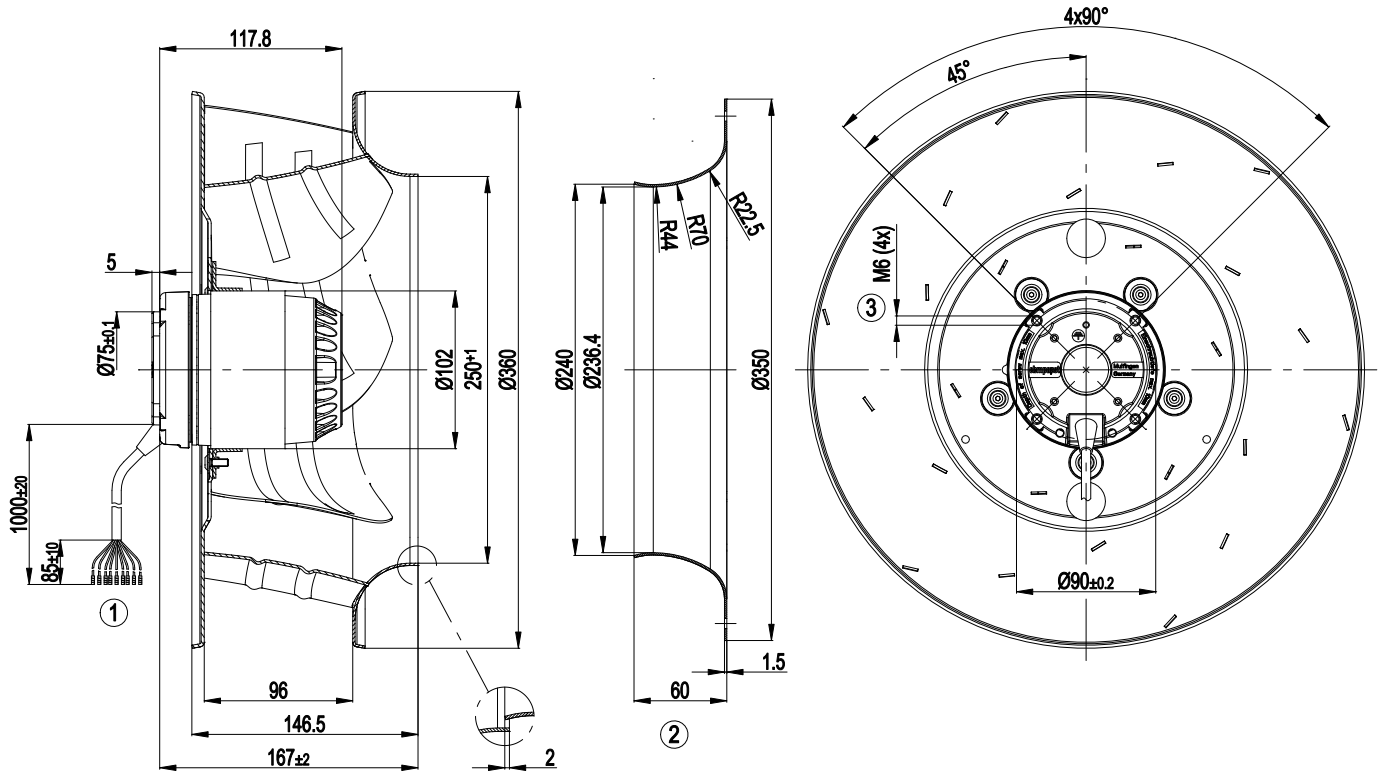

1	Connection line silicone 0.5 mm, 9 x brass lead tips crimped
2	Accessory part: Inlet nozzle 35560-2-4013 not included in the standard scope of delivery, other inlet nozzles on request
3	Depth of screw max. 10 mm

ebm-papst Mulfingen GmbH & Co. KG · Bachmühle 2 · D-74673 Mulfingen · Phone +49 (0) 7938 81-0 · Fax +49 (0) 7938 81-110 · info1@de.ebmpapst.com · www.ebmpapst.com

AC centrifugal fan

backward curved, single inlet

Connection screen

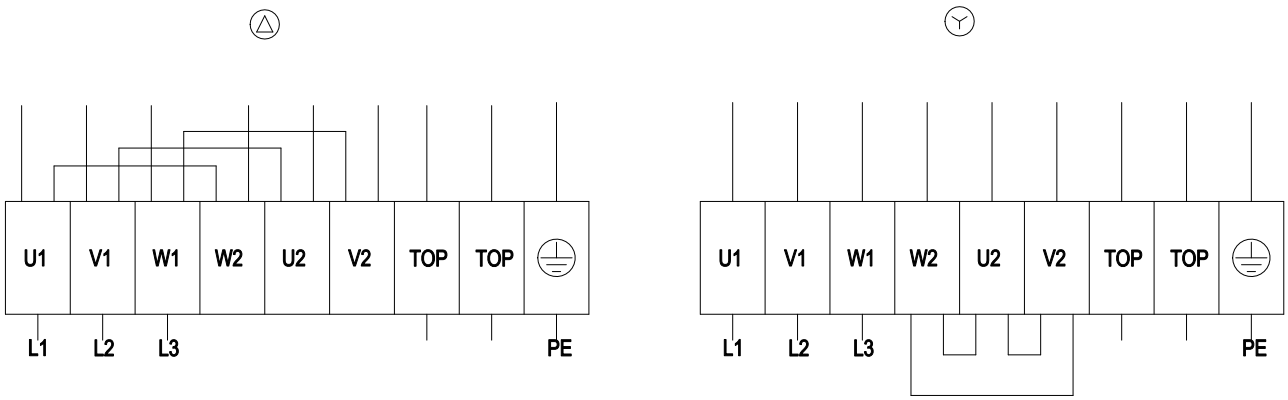

Δ	Delta-connection	Y	Star connection	L1	= U1 = black
L2	= V1 = blue	L3	= W1 = brown	W2	yellow
U2	green	V2	white	TOP	2 x grey
PE	green / yellow				

ebm-papst Mulfingen GmbH & Co. KG · Bachmühle 2 · D-74673 Mulfingen · Phone +49 (0) 7938 81-0 · Fax +49 (0) 7938 81-110 · info1@de.ebmpapst.com · www.ebmpapst.com

AC centrifugal fan

backward curved, single inlet

Charts: Air flow 50 Hz

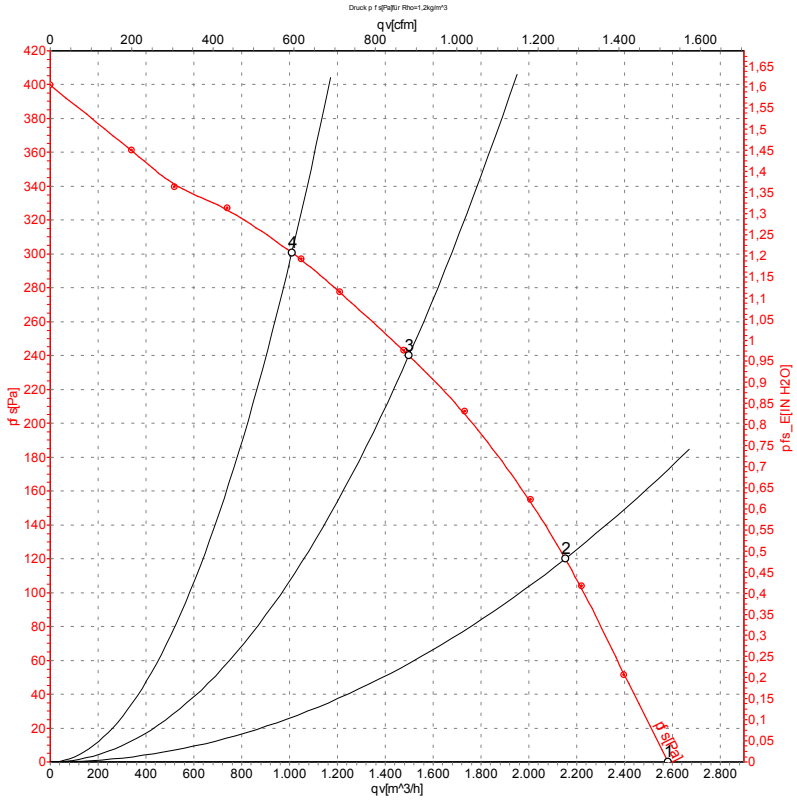

Measurement: LU-54350

Air performance measured as per ISO 5801 Installation category A. For detailed information on the measuring set-up, please contact ebm-papst. Suction-side noise levels: LwA measured as per ISO 13347 / LpA measured with 1m distance to fan axis. The values given are valid under the measuring conditions mentioned above and may vary according to the actual installation situation. With any deviation from the standard set-up, the specific values have to be checked and reviewed with the unit installed.

Measured values

	U	f	n	P_e	I	qv	p_{fs}
	V	Hz	min^{-1}	W	A	m^3/h	Pa
1	400	50	1400	170	0.52	2585	0
2	400	50	1375	211	0.55	2155	120
3	400	50	1360	231	0.57	1500	240
4	400	50	1370	215	0.54	1010	300

U = Supply voltage · f = Frequency · n = Speed · P_e = Power input · I = Current draw · qv = Air flow · p_{fs} = Pressure increase

ebm-papst Mulfingen GmbH & Co. KG · Bachmühle 2 · D-74673 Mulfingen · Phone +49 (0) 7938 81-0 · Fax +49 (0) 7938 81-110 · info1@de.ebmpapst.com · www.ebmpapst.com

AC centrifugal fan

backward curved, single inlet

Charts: Air flow 60 Hz

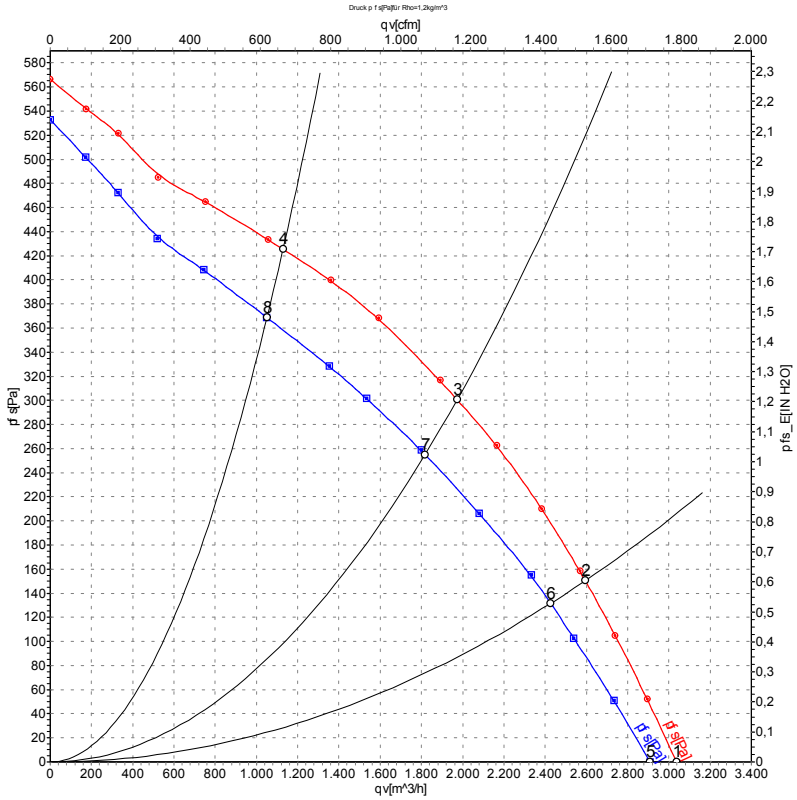

Measurement: LU-54436
Measurement: LU-54351

Air performance measured as per ISO 5801 Installation category A. For detailed information on the measuring set-up, please contact ebm-papst. Suction-side noise levels: LwA measured as per ISO 13347 / LpA measured with 1m distance to fan axis. The values given are valid under the measuring conditions mentioned above and may vary according to the actual installation situation. With any deviation from the standard set-up, the specific values have to be checked and reviewed with the unit installed.

Measured values

	U	f	n	P_e	I	qv	p_{fs}
	V	Hz	min^{-1}	W	A	m^3/h	Pa
1	480	60	1670	260	0.55	3040	0
2	480	60	1625	316	0.58	2595	150
3	480	60	1595	354	0.61	1975	300
4	480	60	1620	325	0.58	1130	425
5	400	60	1600	235	0.50	2910	0
6	400	60	1525	287	0.57	2425	132
7	400	60	1475	318	0.62	1815	256
8	400	60	1510	294	0.58	1050	369

U = Supply voltage · f = Frequency · n = Speed · P_e = Power input · I = Current draw · qv = Air flow · p_{fs} = Pressure increase

ebm-papst Mulfingen GmbH & Co. KG · Bachmühle 2 · D-74673 Mulfingen · Phone +49 (0) 7938 81-0 · Fax +49 (0) 7938 81-110 · info1@de.ebmpapst.com · www.ebmpapst.com