EC Axial fan, Φ400mm
ECF(K)6E400-PZB4SC0



Performance curve

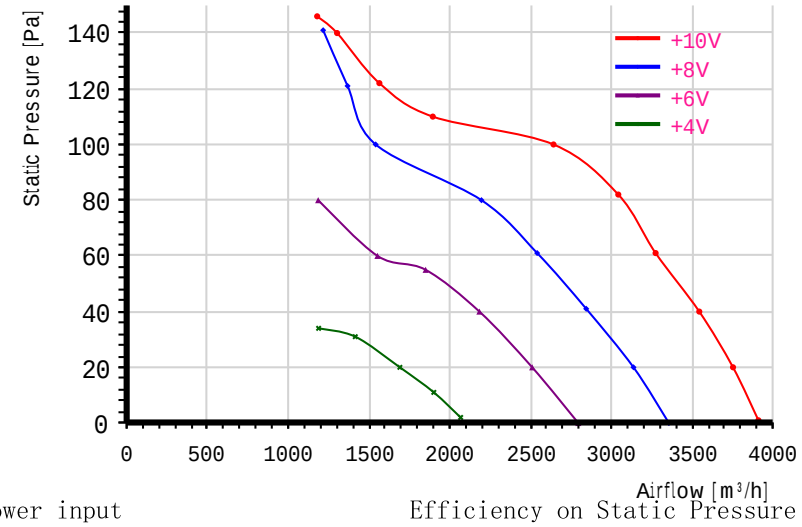

Product Features

☞Motor technology:EC
☞Supply voltage:1P,200~277V
☞Supply frequency:50/60 Hz
☞Rated voltage:230 VAC
☞Power input:200 W
☞Current:1.65 A
☞Speed:1410 r/min
☞Perm.amb.temp:-25℃~+50℃
☞Blades count:4
☞Direction:Suction(Seen from cable exit)
☞Protection class:IP54
☞Insulation class:F
☞Impeller material:cold rolled sheet steel
☞Acoustic:67 dB(A)
☞Controller:Integrated,0~10V PWM
☞ErP level:2015
☞Attachment: Hight Concave Guard Grille

Power input

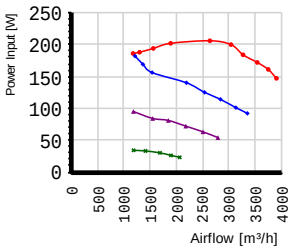

Efficiency on Static Pressure

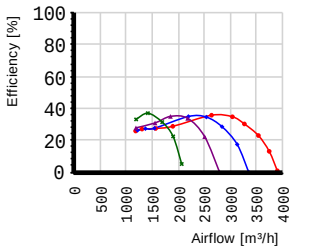

Wiring diagram

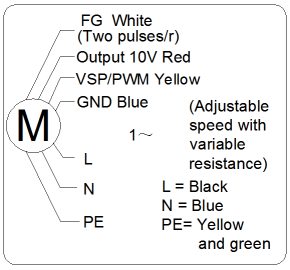

Dimensions mm

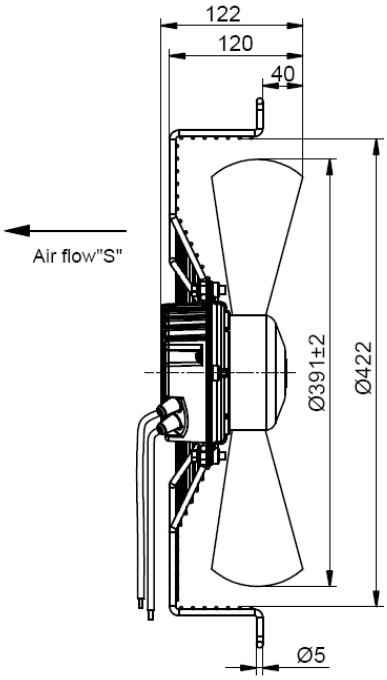

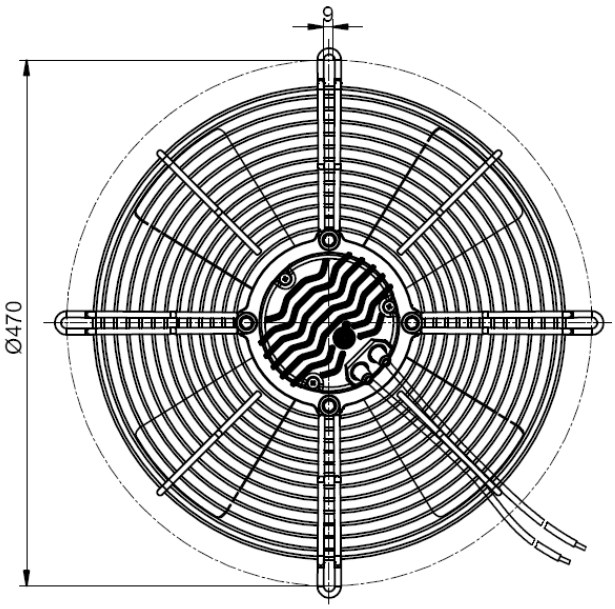

2023-06-26 13:39 Exported from MZFan Selector(V2.4.1.1) DB serialNo=40518