EC Axial fan, Φ350mm
ECF(K)6E350-PZB5SC1

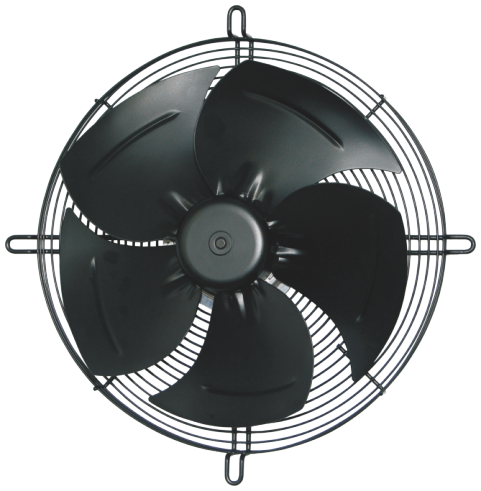

Performance curve

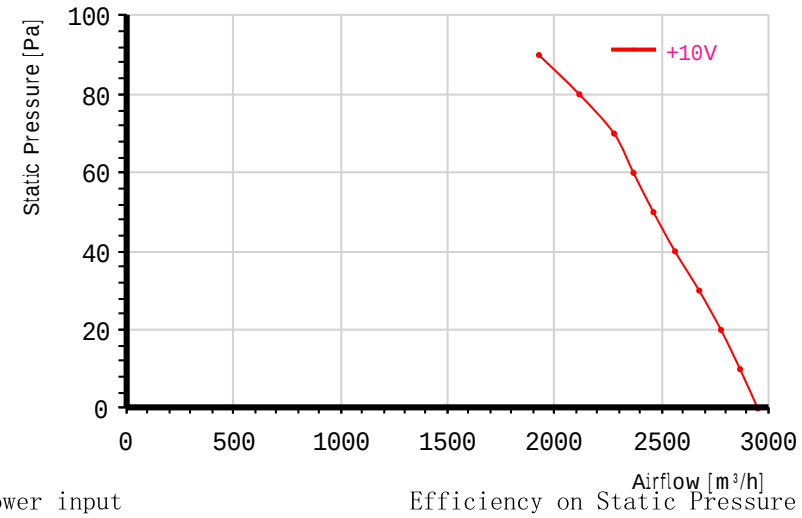

Power input

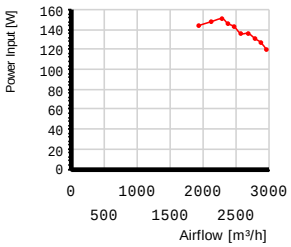

Efficiency on Static Pressure

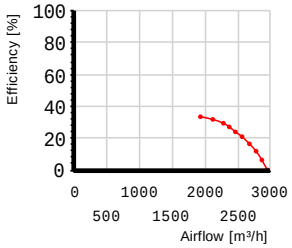

Product Features

☞Motor technology:EC
☞Supply voltage:1P,200~277V
☞Supply frequency:50/60 Hz
☞Rated voltage:230 VAC
☞Power input:150 W
☞Current:1.27 A
☞Speed:1600 r/min
☞Perm.amb.temp:-25℃~+50℃
☞Blades count:5
☞Direction:Suction(Seen from cable exit)
☞Protection class:IP54
☞Insulation class:F
☞Impeller material:cold rolled sheet steel
☞Acoustic:66 dB(A)
☞Controller:Integrated,0~10V PWM
☞Attachment: Hight Concave Guard Grille

Wiring diagram

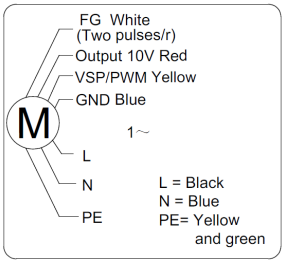

Dimensions mm

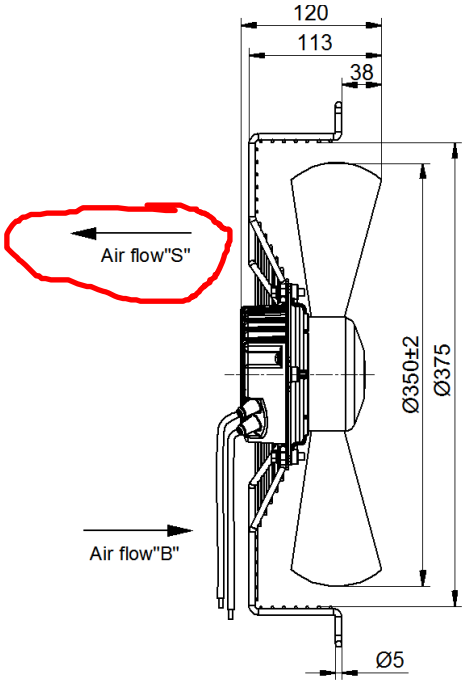

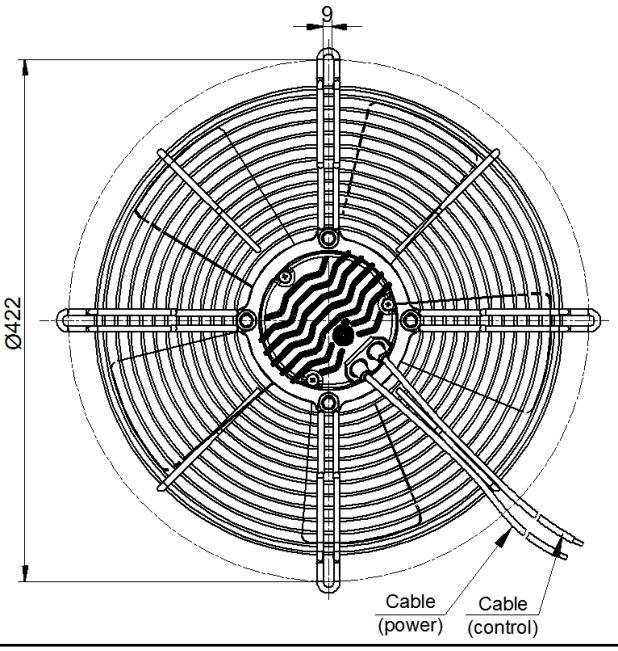

2024-09-10 10:23 Exported from MZFan Selector(V2.4.2.0) DB serialNo=45000