MAER	Product model	YSWF102L70P8-753N-630 S
	product type	External rotor axial flow fan
	customer code	/
	Product number	/
	certification	CE、CCC

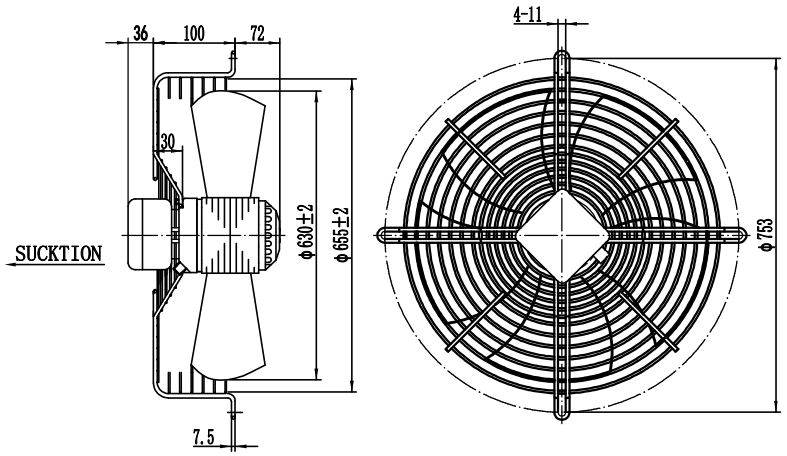

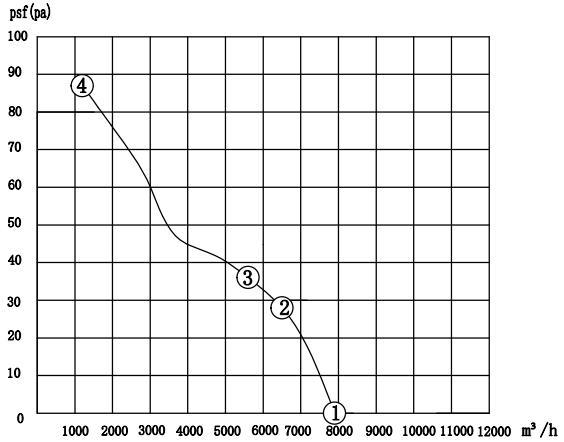

PS: Fan working performance tested with Maer wall plate, and under standard atmospheric pressure at 20 ℃.

Performance parameters at key point:

380V/ 50Hz	psf (pa)	I (A)	P1 (W)	n (r/min)	Q (m³/h)	Note
①	0	0.66	281	677	7922	
②	15	0.67	291	672	7291	
③	36	0.69	317	661	5610	MAX EFF.
④	87	0.77	402	618	1186	IMAX

Condition of use:

1）voltage and frequency：3～380V±5％ 50Hz。
2）Lead cable:Terminal block, the recommended standard of lead wire is not less than 0.75 mm².
3）Installation position: vertical or upward.
4) ambient temperature:-40～70℃。

The external wiring diagram:

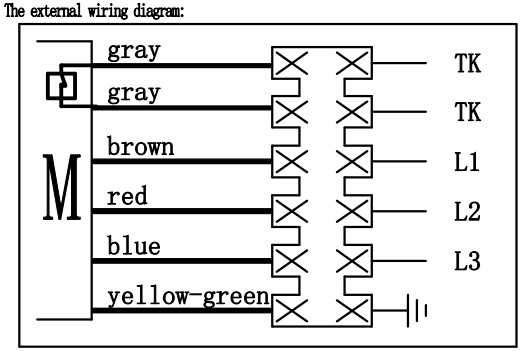

Wiring diagram:

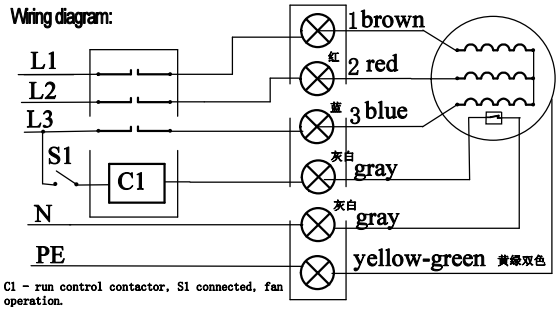

C1 - run control contactor, S1 connected, fan operation.

Technical specification:

1.All parts of fan should be properly assembled, no oil or dirt on the surface, no obvious distortion, mechanical damage and other defects.
2.Fan rotation is flexible, no delay, no operation sound, no scratch and other undesirable phenomena.
3.The safety requirement of fan is performed according to GB12350-2009, the electrical strength is 1800V•S, and the insulation resistance is not less than 100MΩ at room temperature.
4.Motor insulation class, F CLASS.
5.Motor protection level, IP54, fan protection level, IP2X.
6.The fan balance level is:672±10%r/min high than G6.3,vibration value is less than 3mm/s.
7.With 630 concave mesh N100.
8.External thermal protector.
9.With Terminal block.Cassette foam.
10.English trademark .
11.With TPI bearing.

Test data at free：

connection	UAC (V)±5%	f (Hz)	P1 (W) ±10%	I (A)±10%	n (r/min) ±10%	Noise dB(A)
	3～380	50	291	0.67	672	64

Nameplate:

YSWF102L70P8-753N-630 S 3～380V/50Hz
317W 0.69A 661r/min @366Pa
CL.F IP54 2022/07

Mark

MAER MOTORS & FANS AXIAL FAN MOTOR
MODEL:YSWF102L70P8-753N-630 SUCTION
VOLTAGE:3～380V/50Hz
N.W/G.W. / KG
MEAS: 67X67X24
CL.F WITH TERMINAL BOX
XXXXXXXX

版本/Ver.		Page		
重量/WG.	Kg	签名/Name	日期/Date	
绘图/Drawing				
审核/Checked				
批准/Approved				
客户确认/Customer confirmation				

浙江马尔风机有限公司
Maer Fan Motor ZHEJIANG MAER FAN MOTOR CO.,LTD.
产品规格书
Product Specification

型号/Model	YSWF102L70P8-753N-630 S
品号 P/N	