MAER		
	型号 MODEL	YSWF102L70P6-753N-630 S
	品号 ITEM NO	
	客户代号CUSTOMER CODE	/
	产品类型PRODUCT TYPE	External rotor axial flow fan
	产品认证APPROVALS	CE、CQC

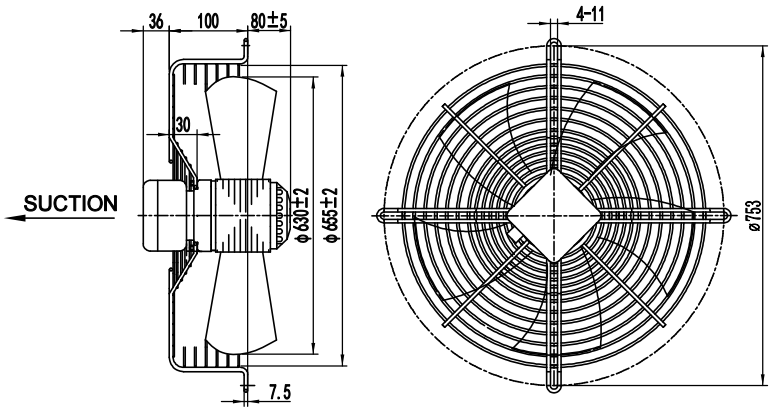

psf(pa)

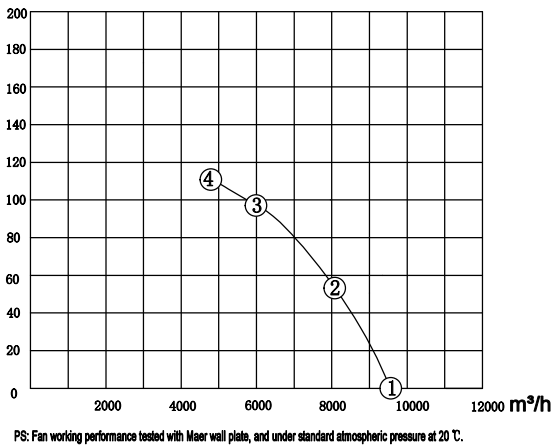

PS: Fan working performance tested with Maer wall plate, and under standard atmospheric pressure at 20 ℃.

Condition of use:

1）voltage and frequency：3～ 380 V±5 %， 50 Hz。
2）Qualification requirements: Terminal block, the recommended standard of lead wire is not less than 0.75 mm²。
3）Installation position: vertical or upward.
4) ambient temperature:-40～85℃。

The external wiring diagram:

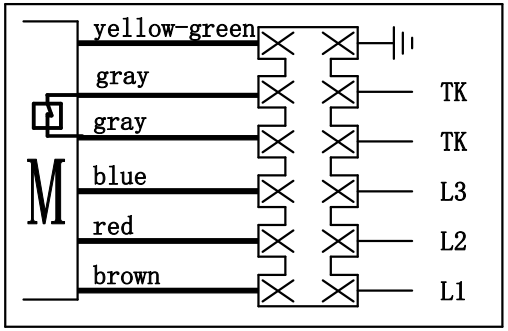

Wiring diagram:

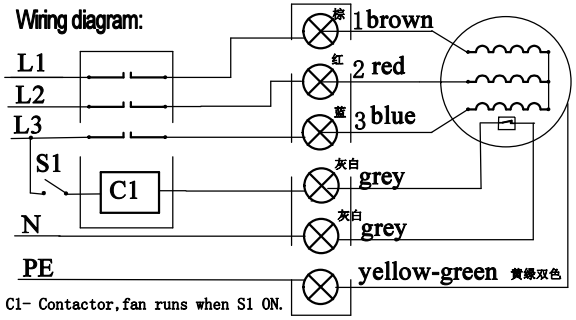

Performance parameters at key point:

	psf	I	P1	n	Q	Note
	(pa)	(A)	(W)	(r/min)	(m³/h)	
①	0	1.16	373	947	9510	
②	54	1.20	436	936	8007	
③	97	1.23	485	925	6047	MAX EFF.
④	112	1.25	509	920	4777	IMAX

Mark:

MAER MOTORS & FANS AXIAL FAN MOTOR
MODEL:YSWF102L70P6-753N-630 SUCTION
VOLTAGE:3～380V/50Hz
N.W/G.W. / KG
MEAS:67X67X24 CM
CL.F WITH TERMINAL BOX
XXXXXXX

Test data at free：

connection	UAC (V)±5%	f (Hz)	P1 (W) ±10%	I (A)±10%	n (r/min) ±10%	Noise dB(A)
	3～380	50	500	1.25	920	71

Technical specification:

1.All parts of fan should be properly assembled, no oil or dirt on the surface, no obvious distortion, mechanical damage and other defects.
2.Fan rotation is flexible, no delay, no operation sound, no scratch and other undesirable phenomena.
3.The safety requirement of fan is performed according to GB12350-2009, the electrical strength is 1800V•S, and the insulation resistance is not less than 100M at room temperature.
4.Motor insulation class, F CLASS.
5.Motor protection level, IP54, fan protection level, IP2X.
6.The fan balance level is:920±10%r/min high than G6.3, vibration value is less than 5.4mm/s.
7.630 concave net cover N100.
8.External thermal protector.
9.With Terminal block.Cassette foam.
10.TPI bearing.

Nameplate:

YSWF102L70P6-753N-630 S 3～380V/50Hz
485W 1.23A 925r/min @ 97Pa
η sf=33.70% N=41.9 CL.F IP54 2023/03

版本/Ver.		Page 1		
重量/WG.	Kg	签名/Name	日期/Date	
绘图/Drawing				
审核/Checked				
批准/Approved				
客户确认/Customer confirmation				

浙江马尔风机有限公司
MAER Fan Motor ZHEJIANG MAER FAN MOTOR CO.,LTD.
产品规格书
Product Specification

型号/Model	YSWF102L70P6-753N-630 S
品号 P/N	