S6D630
8317073684

AC axial fan

sickle-shaped blades (S series)
with guard grille for short nozzle

ebm-papst Ventilator (Xi'an) Co.,Ltd
No.2555 Weishui Road, Lintong District,
Xi'An, China, 710000
Tel: +86(0)29-81366100
www.ebmpapst.com

Nominal data

Type	**8317073684**
Motor	**M6D110-GF**

Phase		3~	3~
Nominal voltage	VAC	400	400
Wiring		Δ	Y
Frequency	Hz	50	50
Method of obtaining data		ml	ml
Valid for approval/standard		-	-
Speed (rpm)	min^{-1}	860	630
Power consumption	W	710	430
Current draw	A	1.34	0.75
Max. back pressure	Pa	100	50
Max. back pressure	in. wg	0.4	0.2
Min. ambient temperature	°C	-40	-40
Max. ambient temperature	°C	55	55
Starting current	A	4	1.15

ml = Max. load · me = Max. efficiency · fa = Free air · cs = Customer specification · ce = Customer equipment
Subject to change

preliminary

S6D630
8317073684

AC axial fan

sickle-shaped blades (S series)
with guard grille for short nozzle

Technical description

Weight	15.6 kg
Size	630 mm
Motor size	110
Rotor surface	Cast in aluminum
Terminal box material	PP plastic
Blade material	Sheet aluminum
Guard grille material	Steel, coated with black plastic (RAL 9005)
Number of blades	5
Blade pitch	0°
Airflow direction	V
Direction of rotation	Counterclockwise, viewed toward rotor
Degree of protection	IP54
Insulation class	"F"
Moisture (F) / Environmental (H) protection class	H2
Ambient temperature note	Occasional start-up at temperatures between -40°C and -25°C is permitted. For continuous operation at ambient temperatures below -25°C (such as refrigeration applications), use must be made of a fan design with special low-temperature bearings.
Max. permitted ambient temp. for motor (transport/storage)	+80 °C
Min. permitted ambient temp. for motor (transport/storage)	-40 °C
Installation position	Shaft horizontal or rotor on bottom; rotor on top on request
Condensation drainage holes	On rotor side
Mode	S1
Motor bearing	Ball bearing
Touch current according to IEC 60990 (measuring circuit Fig. 4, TN system)	<= 3.5 mA
Electrical hookup	Terminal box
Motor protection	Thermal overload protector (TOP) with basic insulation
With cable	Axial
Protection class	I (with customer connection of protective earth)
Conformity with standards	EN 60034-1 (2010)
Approval	CCC

preliminary

S6D630
8317073684

AC axial fan

sickle-shaped blades (S series)
with guard grille for short nozzle

Product drawing

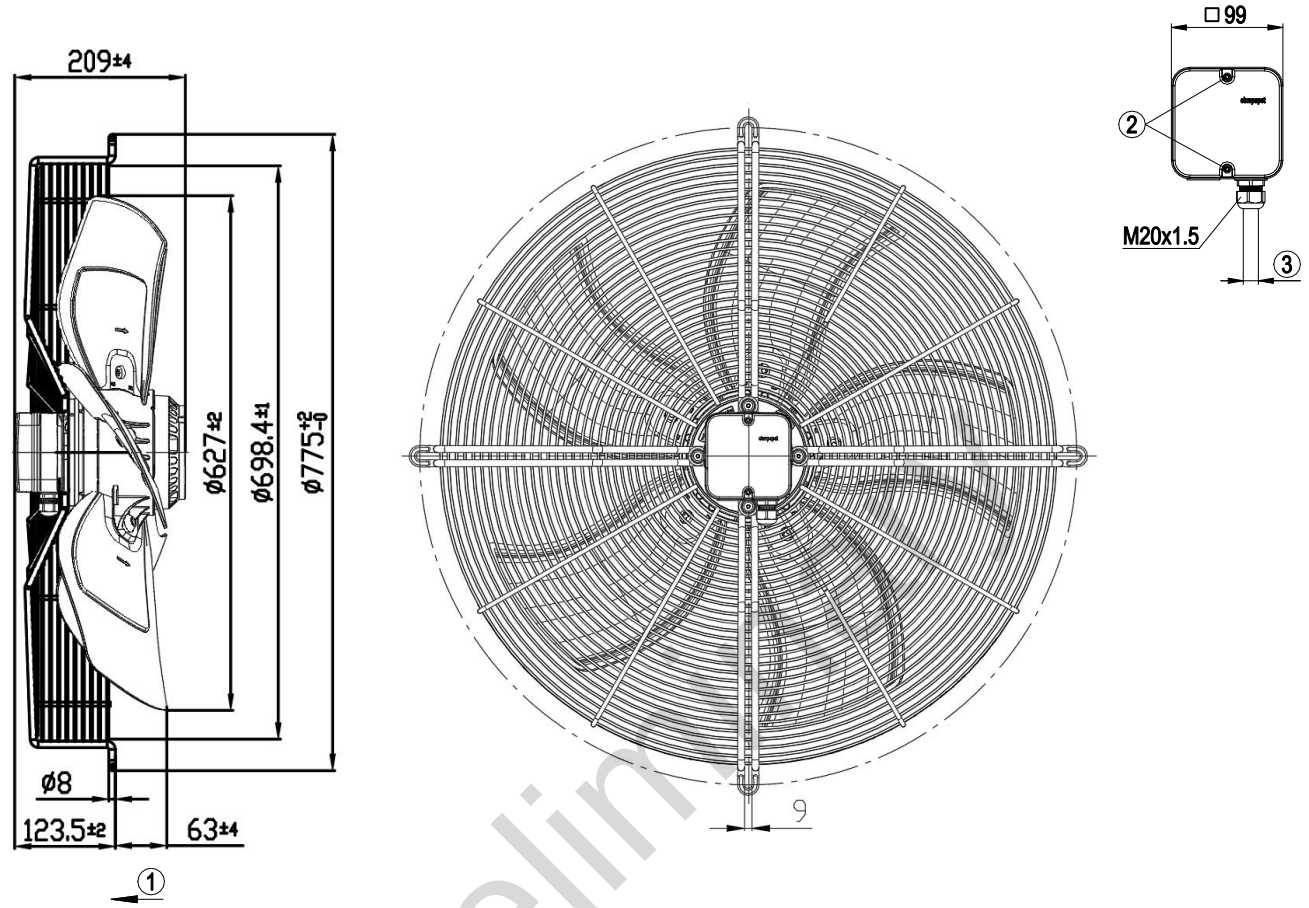

1	Direction of air flow "V"
2	Tightening torque 1.5 ± 0.2 Nm
3	Cable diameter min. 6 mm, max. 12 mm, tightening torque 2 ± 0.3 Nm

preliminary

AC axial fan

sickle-shaped blades (S series)
with guard grille for short nozzle

Connection diagram

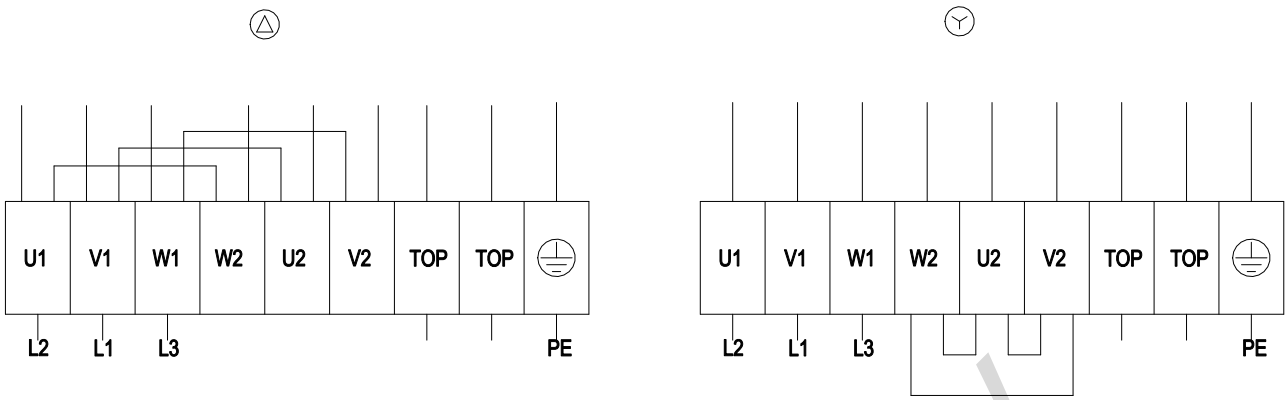

Δ	Delta connection	Y	Star connection	L1	= V1 = blue
L2	= U1 = black	L3	= W1 = brown	W2	yellow
U2	green	V2	white	TOP	2x gray
PE	green/yellow				

preliminary

S6D630
8317073684

AC axial fan

sickle-shaped blades (S series)
with guard grille for short nozzle

Curves: Air performance 50 Hz

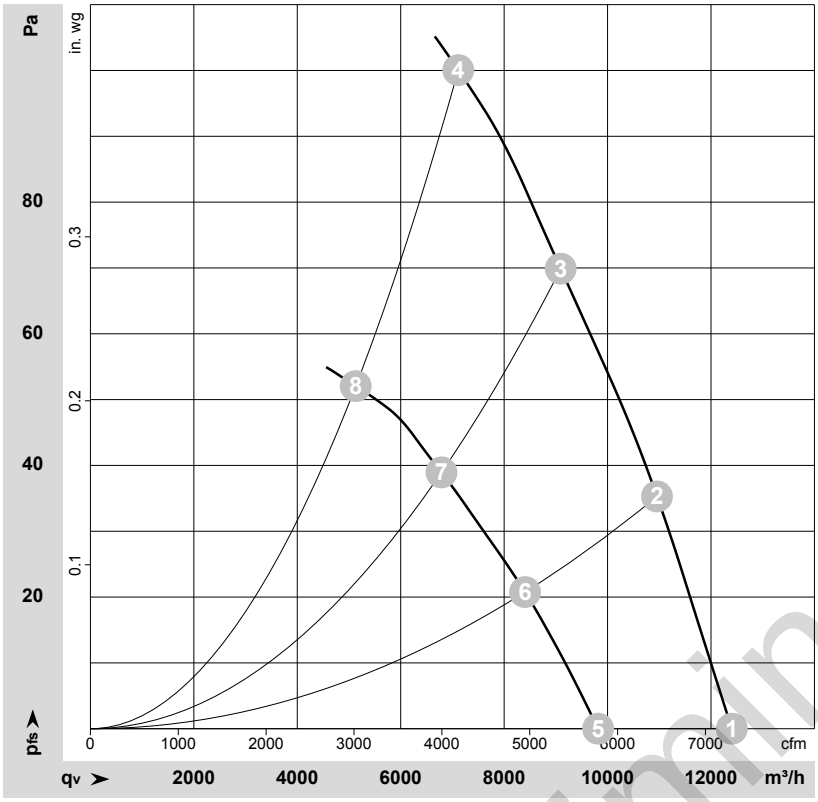

ρ = 1.2 kg/m³ ± 2 %

Measurement:103620
Measurement:103619

preliminary

Fan performance

	Wired	U	f	n	P_e	I	q_V	p_{fs}
		V	Hz	min^{-1}	W	A	m^3/h	Pa
1	Δ	400	50	905	545	1.18	12405	0
2	Δ	400	50	890	604	1.22	10955	35
3	Δ	400	50	875	654	1.28	9095	70
4	Δ	400	50	860	710	1.34	7115	100
5	Y	400	50	720	371	0.64	9815	0
6	Y	400	50	685	397	0.68	8405	21
7	Y	400	50	650	414	0.71	6790	39
8	Y	400	50	630	430	0.75	5130	52

Wired = Wiring · U = Voltage · f = Frequency · n = Speed (rpm) · P_e = Power consumption · I = Current draw · q_V = Air flow · p_{fs} = Pressure increase