8317073848

AC axial fan - HyBlade

sickle-shaped blades (S series)

with guard grille for short nozzle

ebm-papst Ventilator (Shanghai) Co.,Ltd.

No.418, Hua Jing Road, Wai Gao Qiao Free Trade Zone, Pudong

Tel:+86(021)-50460183

www.ebmpapst.com

Nominal data

Type	8317073848
Motor	**M4D138-LA**

Phase		3~	3~
Nominal voltage	VAC	400	400
Wiring		Δ	Y
Frequency	Hz	50	50
Method of obtaining data		ml	ml
Valid for approval/standard		-	-
Speed (rpm)	min^{-1}	1320	1050
Power consumption	W	2630	1750
Current draw	A	4.78	2.95
Max. back pressure	Pa	220	140
Max. back pressure	in. wg	0.88	0.56
Min. ambient temperature	°C	-40	-40
Max. ambient temperature	°C	60	60
Starting current	A	19	6.5

ml = Max. load · me = Max. efficiency · fa = Free air · cs = Customer specification · ce = Customer equipment

Subject to change

ebmpapst

AC axial fan - HyBlade

sickle-shaped blades (S series)

with guard grille for short nozzle

Technical description

Weight	30 kg
Fan size	630 mm
Rotor surface	Cast in aluminum
Terminal box material	PP plastic
Blade material	Sheet aluminum insert, sprayed with PP plastic
Guard grille material	Steel, coated with black plastic (RAL 9005)
Number of blades	5
Blade pitch	0°
Airflow direction	"V"
Direction of rotation	Clockwise, viewed toward rotor
Degree of protection	IP54
Insulation class	"F"
Moisture (F) / Environmental (H) protection class	F3-1
Ambient temperature note	Occasional start-up between -40°C and -25°C is permissible. For continuous operation at temperatures below -25°C (e.g. refrigeration applications) we recommend our fan design with special low-temperature bearings.
Max. permitted ambient temp. for motor (transport/storage)	+ 80 °C
Min. permitted ambient temp. for motor (transport/storage)	- 40 °C
Installation position	Any
Condensation drainage holes	On rotor and stator sides
Mode	S1
Motor bearing	Ball bearing
Touch current according to IEC 60990 (measuring circuit Fig. 4, TN system)	<= 3.5 mA
Electrical hookup	Via terminal box
Motor protection	Thermal overload protector (TOP) with basic insulation
With cable	Axial
Protection class	I (with customer connection of protective earth)
Conformity with standards	EN 60034-1 (2010); EN 61800-5-1
Approval	VDE; EAC

AC axial fan - HyBlade

sickle-shaped blades (S series)

with guard grille for short nozzle

Product drawing

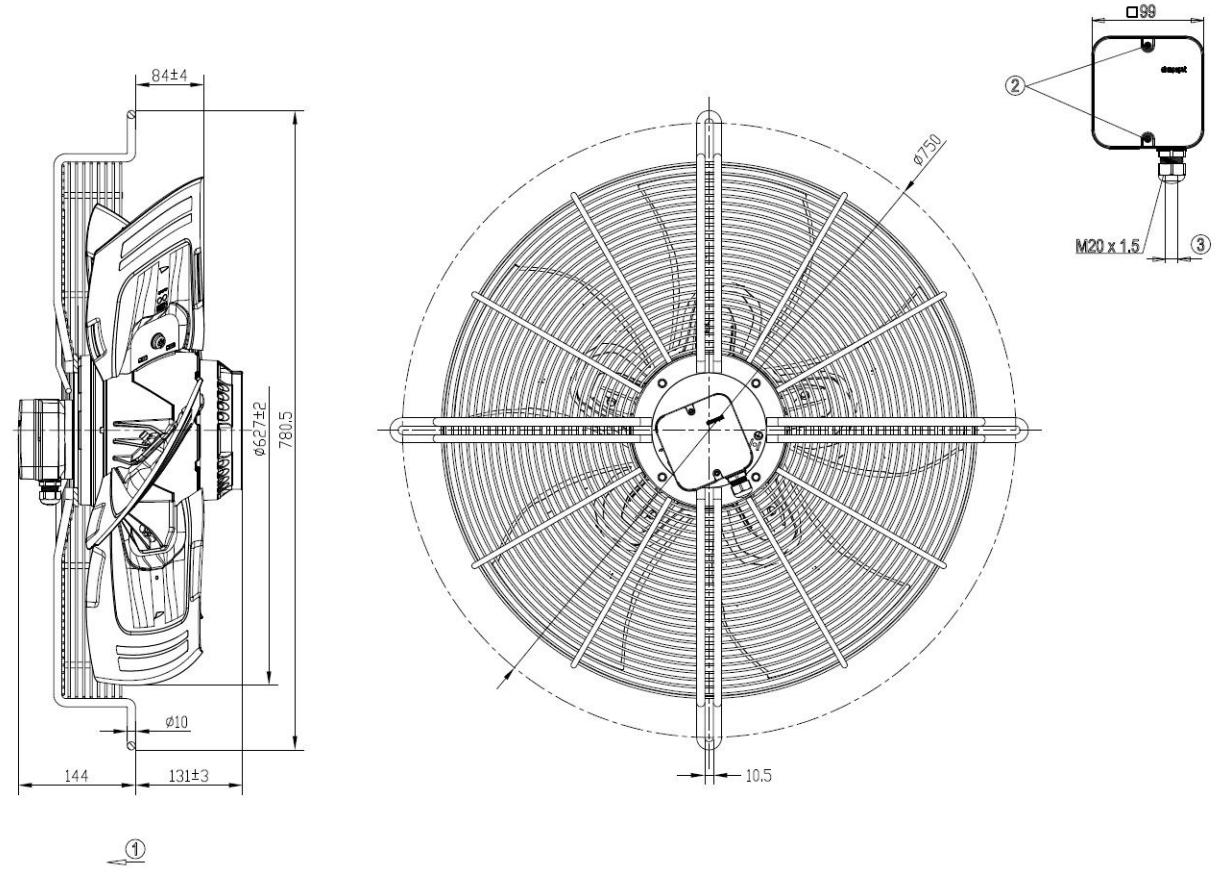

1	Direction of air flow "V"
2	Tightening torque 1.5 ± 0.2 Nm
3	Cable diameter min. 7 mm, max. 14 mm; tightening torque 2 ± 0.3 Nm

ebmpapst

AC axial fan - HyBlade

sickle-shaped blades (S series)

with guard grille for short nozzle

Connection diagram

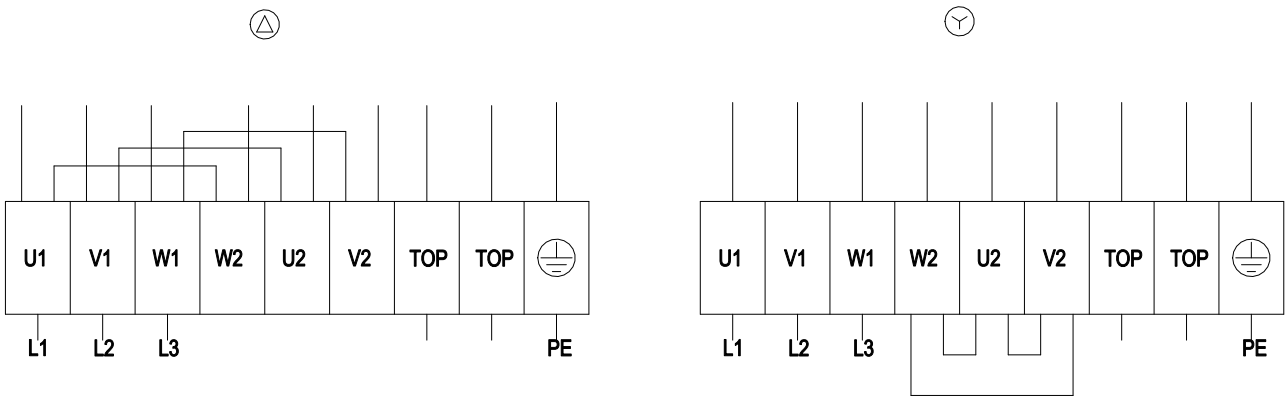

Δ	Delta connection	Y	Star connection	L1	= U1 = black
L2	= V1 = blue	L3	= W1 = brown	W2	yellow
U2	green	V2	white	TOP	2x gray
PE	green/yellow				

ebmpapst

AC axial fan - HyBlade

sickle-shaped blades (S series)

with guard grille for short nozzle

Curves: Air performance 50 Hz

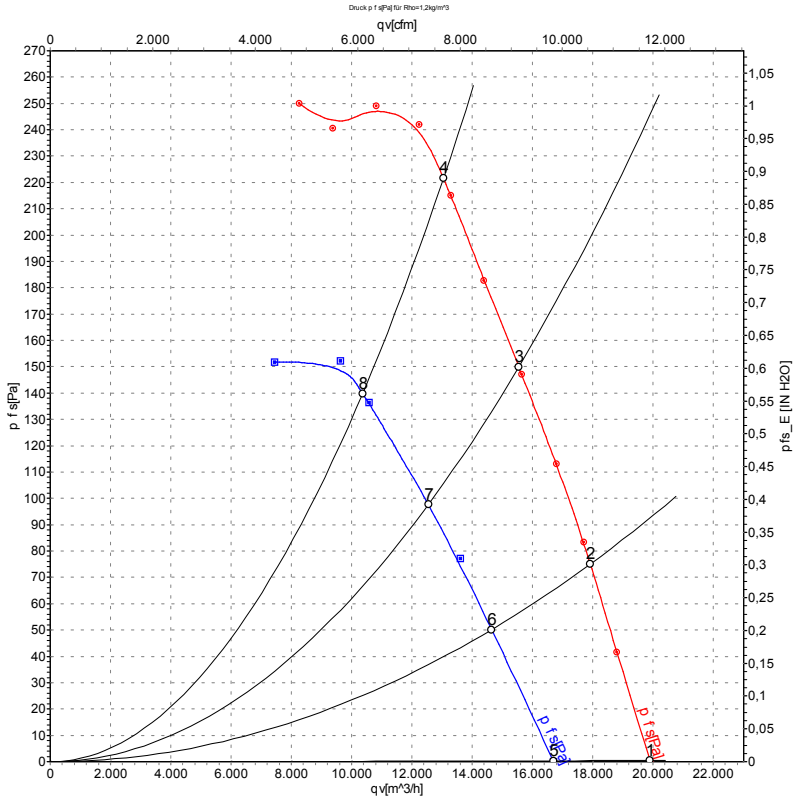

Measured values

	Wired	U	f	n	P_e	I	LpA_{in}	LwA_{in}	LwA_{out}	q_V	p_{fs}	q_V	p_{fs}
		V	Hz	min^{-1}	W	A	dB(A)	dB(A)	dB(A)	m^3/h	Pa	cfm	in. wg
1	Δ	400	50	1375	2116	4.07	71	79	80	19890	0	11705	0.00
2	Δ	400	50	1360	2299	4.29	71	78	79	17910	75	10540	0.30
3	Δ	400	50	1345	2465	4.56	71	77	78	15540	150	9145	0.60
4	Δ	400	50	1320	2630	4.78	73	80	80	13040	220	7675	0.88
5	Y	400	50	1150	1536	2.58	66	74	75	16680	0	9815	0.00
6	Y	400	50	1115	1615	2.71	65	72	73	14640	51	8615	0.20
7	Y	400	50	1080	1684	2.83	65	72	73	12540	98	7380	0.39
8	Y	400	50	1050	1750	2.95	67	74	73	10360	140	6100	0.56

Wired = Wiring · U = Power supply · f = Frequency · n = Speed (rpm) · P_e = Power consumption · I = Current draw · LpA_{in} = Sound pressure level intake side · LwA_{in} = Sound power level intake side
LwA_{out} = Sound power level outlet side · q_V = Air flow · p_{fs} = Pressure increase

ebmpapst