S4D560-BQ01-02

AC axial fan - HyBlade®

sickled blades (S series)

with guard grille for full nozzle

ebm-papst Mulfingen GmbH & Co. KG
Bachmühle 2 · D-74673 Mulfingen
Phone +49 7938 81-0
Fax +49 7938 81-110
info1@de.ebmpapst.com
www.ebmpapst.com

Limited partnership · Headquarters Mulfingen
County court Stuttgart · HRA 590344

General partner: Elektrobau Mulfingen GmbH · Headquarters Mulfingen
County court Stuttgart · HRB 590142

ErP2015 EXCEEDS THE NORM

Nominal data

Type	**S4D560-BQ01-02**
Motor	**M4D110-IA**

Phase		3~	3~	3~	3~
Nominal voltage	VAC	400	400	400	400
Connection		**Δ**	Y	**Δ**	Y
Frequency	Hz	50	50	60	60
Type of data definition		ml	ml	ml	ml
Valid for approval / standard		CE	CE	CE	CE
Speed	min^{-1}	1350	1110	1540	1150
Power input	W	1100	760	1380	840
Current draw	A	2.32	1.3	2.4	1.45
Max. back pressure	Pa	170	115	90	50
Min. ambient temperature	°C	-40	-40	-40	-40
Max. ambient temperature	°C	65	65	60	60

ml = max. load · me = max. efficiency · fa = running at free air · cs = customer specs · cu = customer unit
Subject to alterations

Data according to ErP directive

Installation category	A
Efficiency category	Static
Variable speed drive integrated	No
Specific ratio*	1,00

* Specific ratio = 1 + p_{fs} / 100 000 Pa

		Actual	Request 2013	Request 2015
Overall efficiency η_{es}		34	30	34
Efficiency grade N		40	36	40
Power input P_e	kW	1,11		
Air flow q_v	m^3/h	6995		
Pressure increase p_{fs}	Pa	193		
Speed n	min^{-1}	1345		

Data established at point of optimum efficiency

AC axial fan - HyBlade®

sickled blades (S series)

with guard grille for full nozzle

Technical features

Mass	15.9 kg
Size	560 mm
Surface of rotor	Cast in aluminium
Material of terminal box	PP plastic
Material of blades	Aluminium sheet insert, sprayed with PP plastic
Material of guard grille	Steel, coated in black plastic (RAL9005)
Number of blades	5
Blade angle	-5°
Direction of air flow	"A"
Direction of rotation	Clockwise, seen on rotor
Type of protection	IP 54
Insulation class	"F"
Humidity class	F3-1
Max. permissible ambient motor temp. (transp./ storage)	+80 °C
Min. permissible ambient motor temp. (transp./storage)	-40 °C
Mounting position	Shaft horizontal or rotor on bottom; rotor on top on request
Condensate discharge holes	Rotor-side
Operation mode	S1
Motor bearing	Ball bearing
Leakage current	<= 3.5 mA
Electrical leads	Via terminal box
Motor protection	Thermal overload protector (TOP) brought out
Cable exit	Axial
Protection class	I (if protective earth is connected by customer)
Product conforming to standard	EN 61800-5-1; CE
Approval	VDE

ebm-papst Mulfingen GmbH & Co. KG · Bachmühle 2 · D-74673 Mulfingen · Phone +49 7938 81-0 · Fax +49 7938 81-110 · info1@de.ebmpapst.com · www.ebmpapst.com

AC axial fan - HyBlade®

sickled blades (S series)

with guard grille for full nozzle

Product drawing

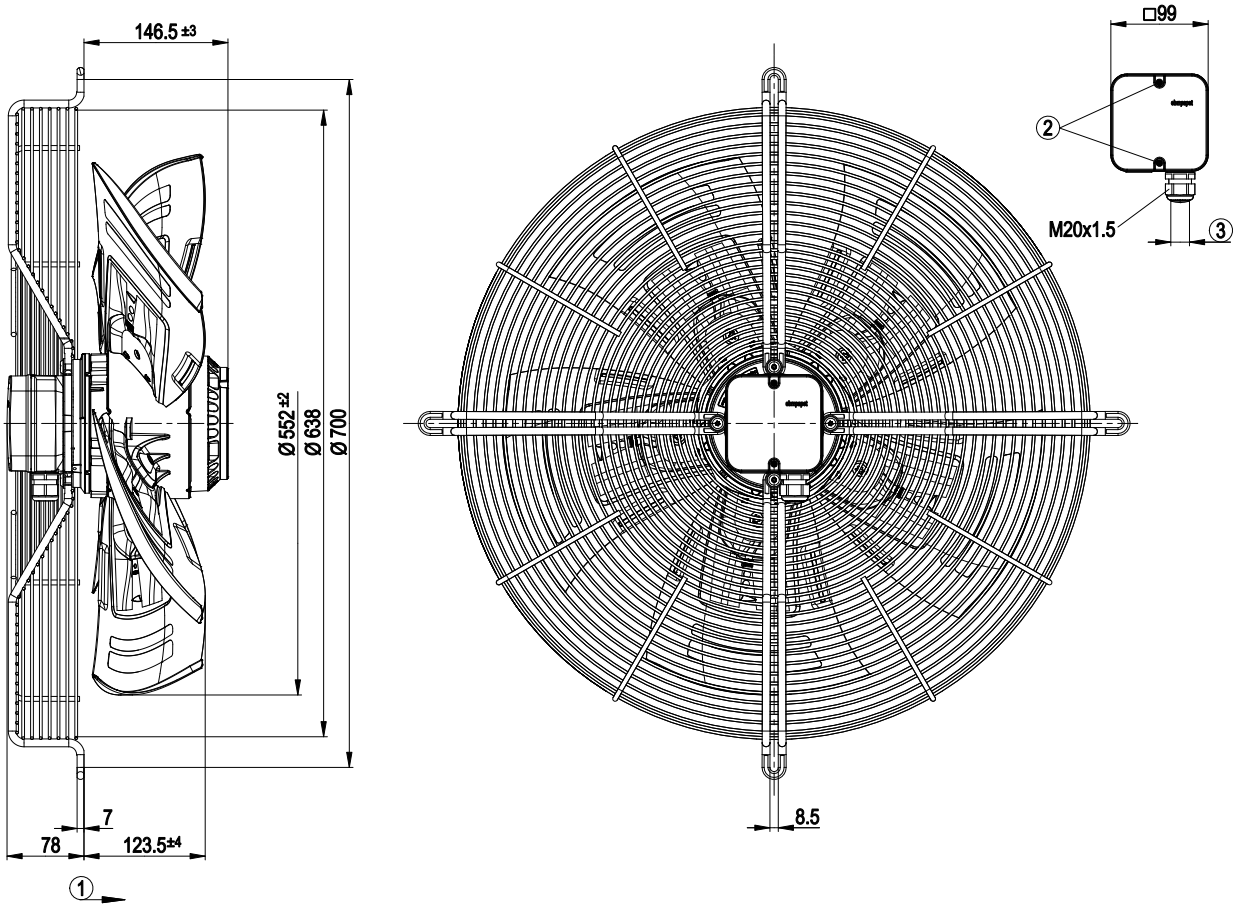

1	Direction of air flow "A"
2	Tightening torque 1.5±0.2 Nm
3	Cable diameter: min. 6 mm, max. 12 mm, tightening torque: 2.0±0.3 Nm

ebm-papst Mulfingen GmbH & Co. KG · Bachmühle 2 · D-74673 Mulfingen · Phone +49 7938 81-0 · Fax +49 7938 81-110 · info1@de.ebmpapst.com · www.ebmpapst.com

AC axial fan - HyBlade®

sickled blades (S series)

with guard grille for full nozzle

Connection screen

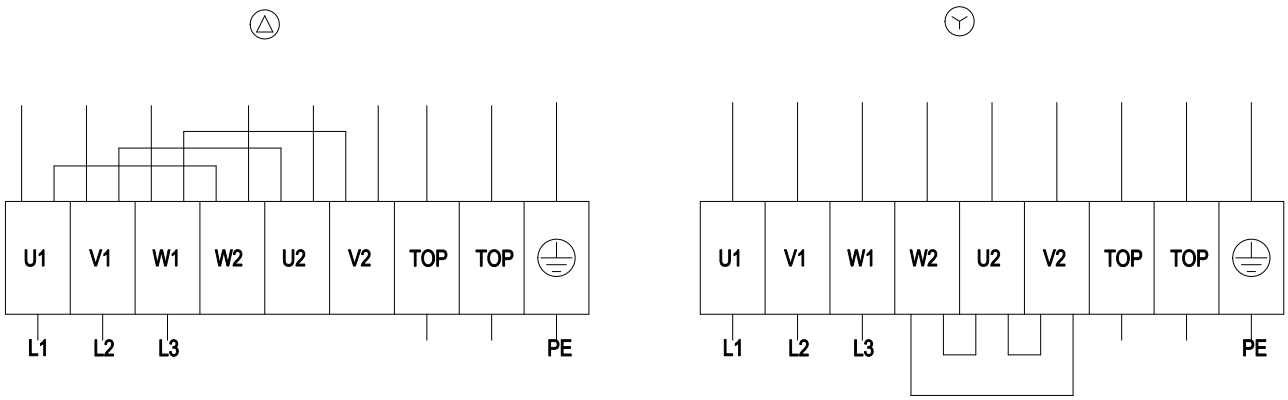

Δ	Delta connection	Y	Star connection	L1	= U1 = black
L2	= V1 = blue	L3	= W1 = brown	W2	yellow
U2	green	V2	white	TOP	2 x grey
PE	green/yellow				

ebm-papst Mulfingen GmbH & Co. KG · Bachmühle 2 · D-74673 Mulfingen · Phone +49 7938 81-0 · Fax +49 7938 81-110 · info1@de.ebmpapst.com · www.ebmpapst.com

AC axial fan - HyBlade®

sickled blades (S series)

with guard grille for full nozzle

Charts: Air flow 50 Hz

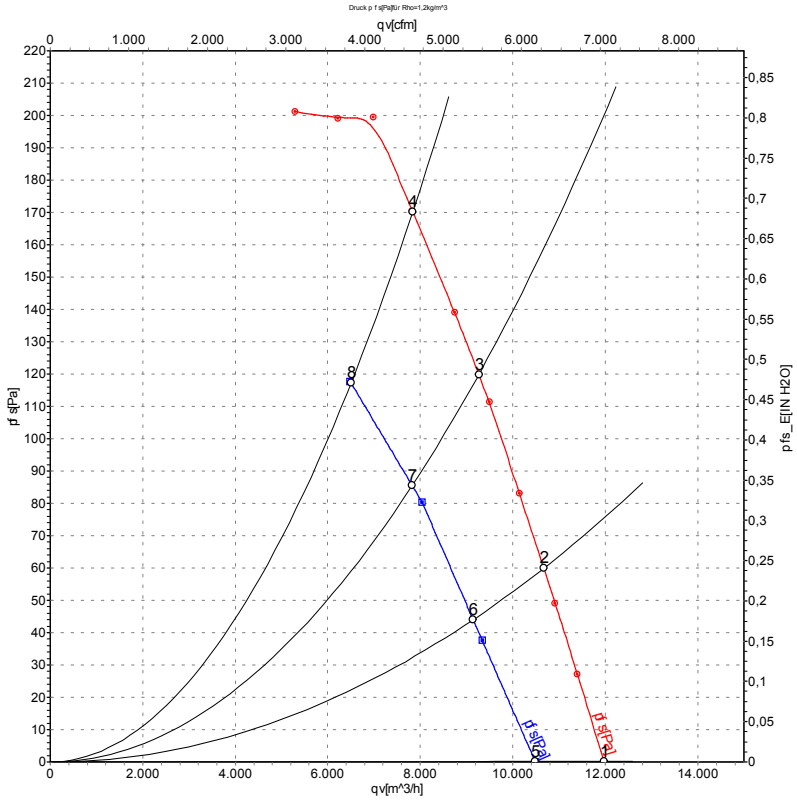

Measurement: LU-111140
Measurement: LU-113347

Air performance measured as per ISO 5801 Installation category A. For detailed information on the measuring set-up, please contact ebm-papst. Suction-side noise levels: LwA measured as per ISO 13347 / LpA measured with 1m distance to fan axis. The values given are valid under the measuring conditions mentioned above and may vary according to the actual installation situation. With any deviation from the standard set-up, the specific values have to be checked and reviewed with the unit installed.

Measured values

	Conn.	U	f	n	P_e	I	LpA_{in}	LwA_{in}	LwA_{out}	qv	p_{fs}
		V	Hz	min^{-1}	W	A	dB(A)	dB(A)	dB(A)	m^3/h	Pa
1	Δ	400	50	1400	806	1.98	69	76	76	11970	0
2	Δ	400	50	1380	915	2.08	67	74	74	10670	60
3	Δ	400	50	1365	1014	2.17	66	73	73	9270	120
4	Δ	400	50	1350	1100	2.32	70	76	76	7840	170
5	Y	400	50	1225	611	1.05	65	72	72	10490	0
6	Y	400	50	1180	671	1.14	63	70	70	9145	44
7	Y	400	50	1140	722	1.22	62	70	69	7825	86
8	Y	400	50	1110	760	1.30	65	74	72	6505	115

ebm-papst Mulfingen GmbH & Co. KG · Bachmühle 2 · D-74673 Mulfingen · Phone +49 7938 81-0 · Fax +49 7938 81-110 · info1@de.ebmpapst.com · www.ebmpapst.com

AC axial fan - HyBlade®

sickled blades (S series)

with guard grille for full nozzle

Charts: Air flow 60 Hz

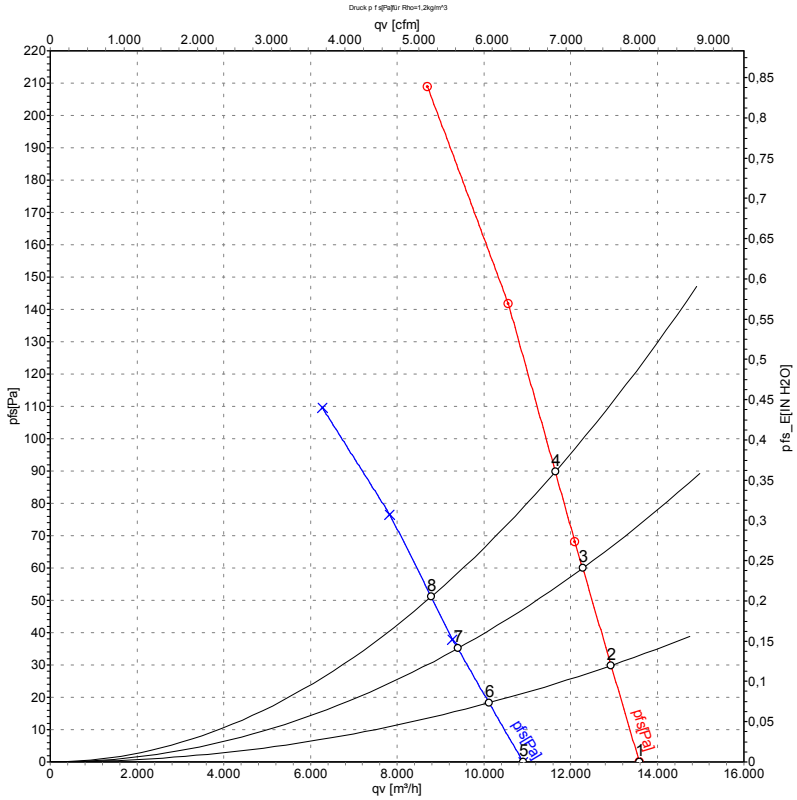

Measurement: LU-119182
Measurement: LU-119183

Air performance measured as per ISO 5801 Installation category A. For detailed information on the measuring set-up, please contact ebm-papst. Suction-side noise levels: LwA measured as per ISO 13347 / LpA measured with 1m distance to fan axis. The values given are valid under the measuring conditions mentioned above and may vary according to the actual installation situation. With any deviation from the standard set-up, the specific values have to be checked and reviewed with the unit installed.

Measured values

	Conn.	U	f	n	P_e	I	LpA_{in}	LwA_{in}	LwA_{out}	qv	p_{fs}
		V	Hz	min^{-1}	W	A	dB(A)	dB(A)	dB(A)	m^3/h	Pa
1	Δ	400	60	1605	1177	2.13	72	79	79	13590	0
2	Δ	400	60	1585	1244	2.21	72	78	78	12940	30
3	Δ	400	60	1565	1312	2.30	71	77	77	12280	60
4	Δ	400	60	1540	1380	2.40	70	77	77	11650	90
5	Y	400	60	1260	786	1.35	66	73	73	10900	0
6	Y	400	60	1220	805	1.38	65	71	71	10120	18
7	Y	400	60	1185	822	1.40	63	70	70	9400	35
8	Y	400	60	1150	840	1.45	63	72	70	8785	51

ebm-papst Mulfingen GmbH & Co. KG · Bachmühle 2 · D-74673 Mulfingen · Phone +49 7938 81-0 · Fax +49 7938 81-110 · info1@de.ebmpapst.com · www.ebmpapst.com