# FE2owlet

## for three phase alternating current, 6-6 pole

FN080-SD



### Description

Motor technology: AC
Rated voltage $U_N$: **3~ 400 V (Δ/Y) ±10 %***
Rated frequency $f_N$: **50 Hz***
Input power $P_1$: **1.90/1.10 kW***
Rated current $I_N$: **3.90/2.00 A***
Rated speed $n_N$: **870/ 630 min$^{-1}$***
Starting current $I_A$: 11.00 / 3.40 A
Current increase ΔI: 0 %
Thermal class: **THCL155***
Min. permitted ambient temperature $t_{R(min)}$: -40 °C
Max. permitted ambient temperature $t_{R(max)}$: 60 °C
Electrical connection: Terminal box
Number of blades: 7
Protection class: IP54
Motor protection: thermal contact
Blades: Aluminium, uncoated
Rotor: Aluminium, uncoated
Conformity: ErP 2015, CE
**ErP-data**
Efficiency $\eta_{statA}$: 36.3 %
Efficiency: $N_{actual}$ = 41.0 / $N_{target}$ = 40**
* Rated data
**ErP 2015

### Characteristic curve

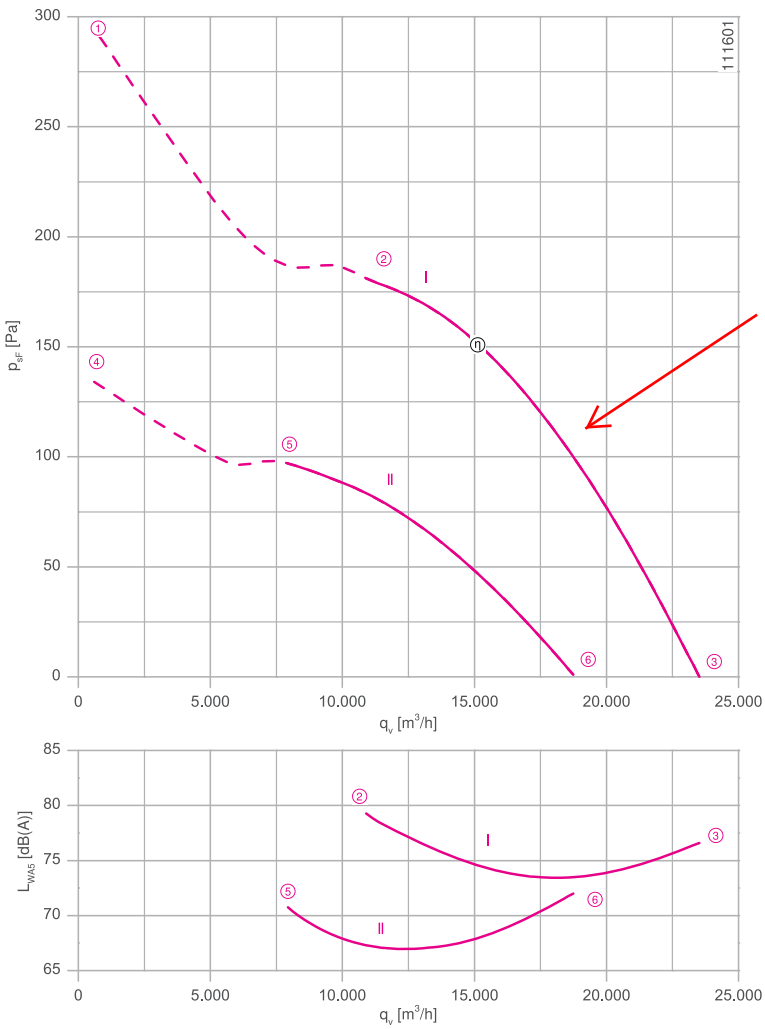


Measured in full bell mouth without guard grille in installation type A according to ISO 5801

Connection diagram Page 531
1360-108XA

System components Page 430

### Dimensions mm

**Airflow direction V**

Design K - axial bolted, mounted for short bell mouth, guard grille pressure side

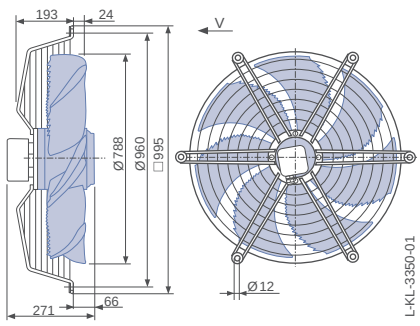


Design S - radially bolted, mounted for short bell mouth, guard grille pressure side

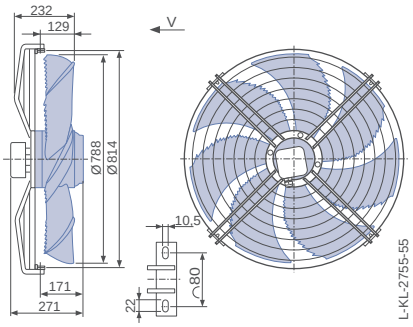


Design I - axial bolted, mounting for bell mouth flange, guard grille pressure side

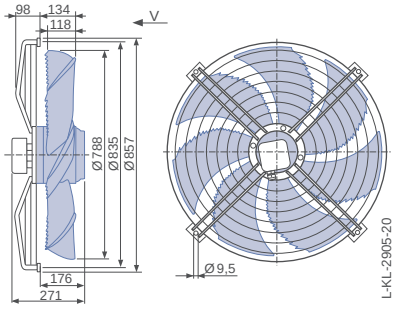

## Performance data

| Type | Connection | Characteristic curve | Voltage<br>U<br>V | Operating point | Current<br>I<br>A | Input power<br>$P_1$<br>W | Speed<br>n<br>$min^{-1}$ | Suction side sound power level<br>$L_{WA5}$<br>dB(A) |
|---|---|---|---|---|---|---|---|---|
| FN080-SD_.6N.V7P5 | Δ | I | 400 | ① | 4.60 | 2400 | 810 | |
| | | | **400*** | ② | **3.90*** | **1900*** | **870*** | 80 |
| | | | 400 | ③ | 3.10 | 1350 | 920 | 77 |
| | Y | II | 400 | ④ | 2.20 | 1200 | 550 | |
| | | | **400*** | ⑤ | **2.00*** | **1100*** | **630*** | 71 |
| | | | 400 | ⑥ | 1.70 | 900 | 740 | 72 |

*rated data

## Fan ordering information

### Airflow direction V

| Design | K (guard grille pressure side) | S (guard grille pressure side) | I (guard grille pressure side) | F (without guard grille) | Q (guard grille pressure side) |
|---|---|---|---|---|---|
| |  |  |  | 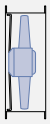 | 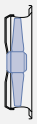 |
| **Type**<br>**Article no.** | **FN080-SDK.6N.V7P5**<br>**168788** | **FN080-SDS.6N.V7P5**<br>**168787** | **FN080-SDI.6N.V7P5**<br>**168785** | **FN080-SDF.6N.V7P5**<br>**168789** | **FN080-SDQ.6N.V7P5**<br>**168786** |
| Weight kg | 37.90 | 33.70 | 33.60 | 45.80 | 42.60 |

## Control technology

| Frequency inverters Fcontrol 3~ | Motor protection units 3~ | Electronic voltage controllers 3~ |
|---|---|---|
|  |  |  |
| Page 480 | Page 518 | Page 506 |

Design F - flange ring with two flanges, without guard grille

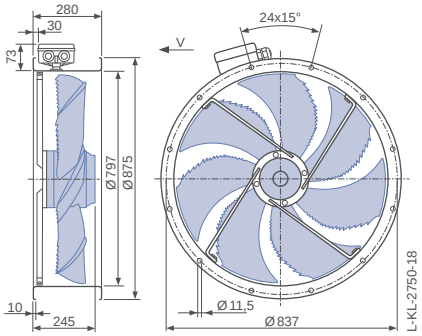


Design Q - square full bell mouth, guard grille pressure side

