CN

Movement by Perfection



The Royal League in **ventilation**, control and drive technology



Product documentation

Type
FN071-SDK.6F.V7P1

Article number
57201055

ZIEHL-ABEGG

1. Product specification

Technical data

Article number	57201055
Type	FN071-SDK.6F.V7P1
Designation	Axial fan with sickle blades
Rated values	3~400V±10% D/Y 50Hz P_1 0.94/0.62kW 1.70/ 1.05A ΔI=10% 900/ 690/min COSY 0,79 70°C
Electrical connection	Terminal box K62
Min. operating temperature °C	-40
Mounting type terminal box	Mounted on Stator
Type of protection	IP54
Thermal class	THCL155
Connection diagram	1360-108XA
Rating plate	1x fixed
Fitting position	H/Vu/Vo
Motor protection	thermal contact
Impregnation	Moisture and hot climate protection
Quality of bearings	ball bearing with long-time lubrication
Material Rotor	Aluminium
Painting rotor	unpainted
Material blades	Aluminium
Painting impeller	unpainted
Guard grille type	ring grille
Other	All connecting elements in stainless steel.
Painting mot.suspens	Motor suspension powder-coated consistency class 2
colour suspension	RAL 9005 (jet black)
Weight kg	26,00
ErP Data	Efficiency η_{statA}: 38.1 % Efficiency: N_{actual} = 44.9 / N_{target} = 40* *ErP 2015

© ZIEHL-ABEGG SE TPL_PG_Datenblatt-V6-10 Release Date: 08.02.2013 Technical changes reserved

All rights reserved. Confidential and proprietary document, not to be disclosed or used except in accordance with applicable agreements. No disclosure to third parties, if not expressively agreed by ZA SE.

2. Characteristic Curve

Air performance

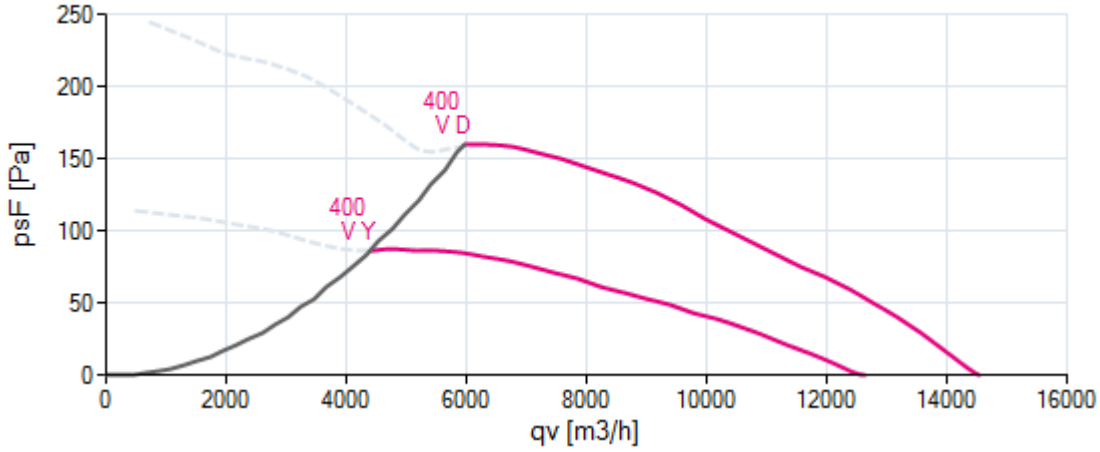

Acoustics

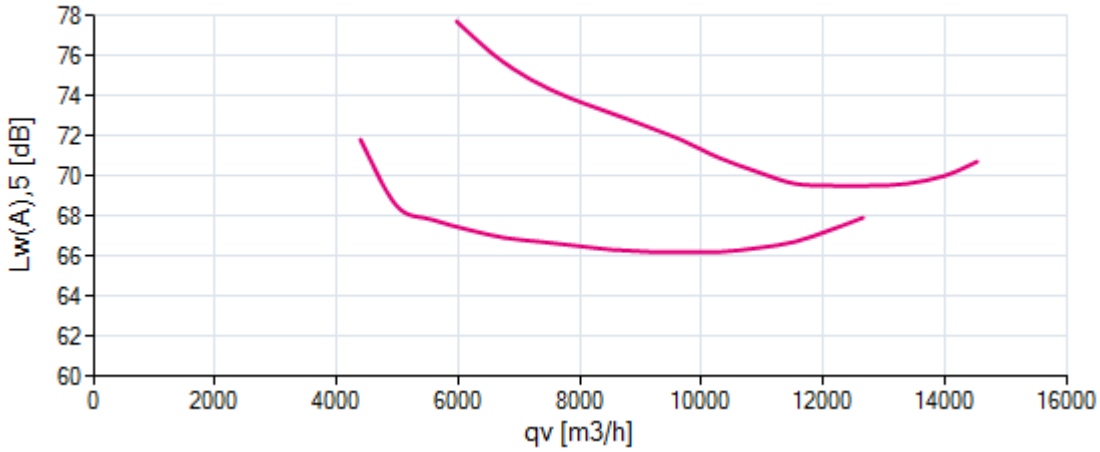

Power input

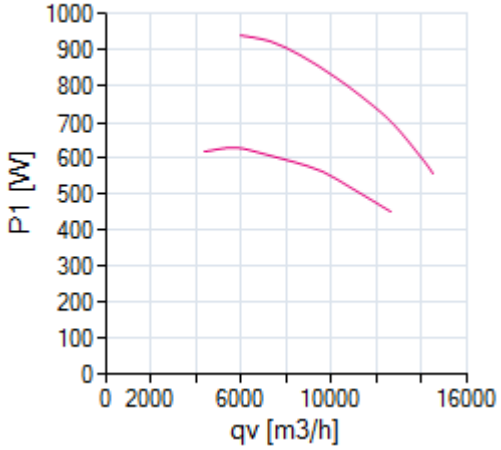

Efficiency

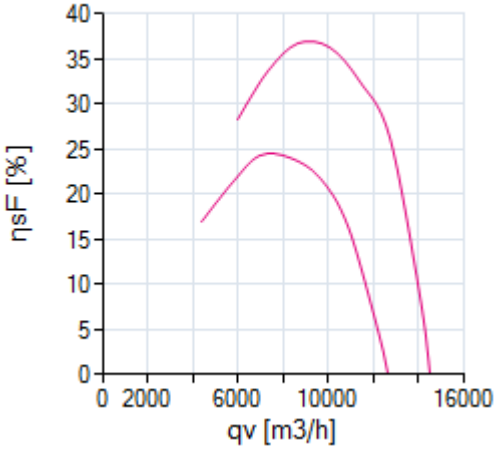

measured in full bell mouth without guard grille in installation type A according to ISO 5801

© ZIEHL-ABEGG SE TPL_PG_Datenblatt-V6-10 Release Date: 08.02.2013 Technical changes reserved

All rights reserved. Confidential and proprietary document, not to be disclosed or used except in accordance with applicable agreements. No disclosure to third parties, if not expressively agreed by ZA SE.

3. Drawing

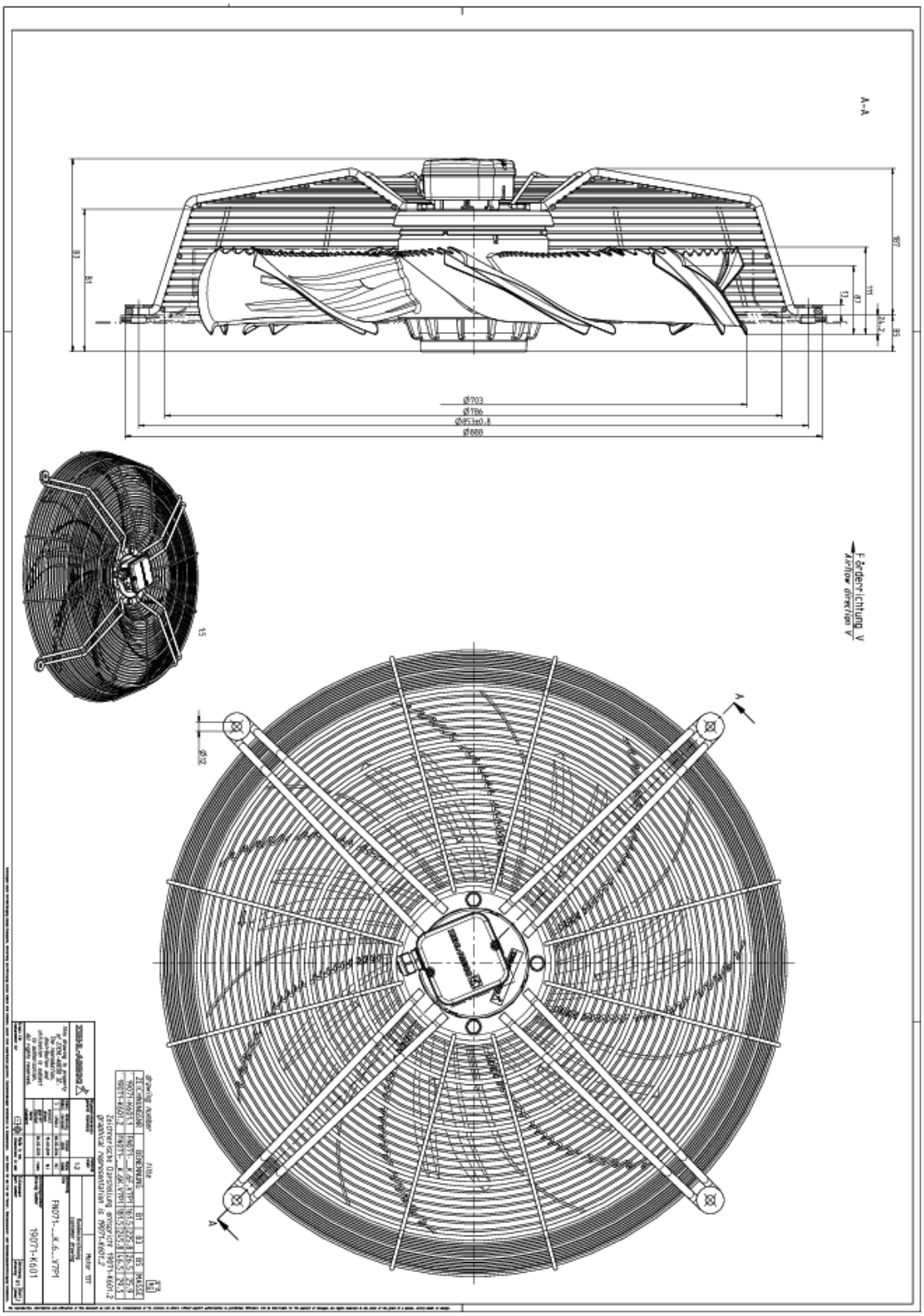

Dimensions in mm
Shown drawing is just to show the dimensions of the fan.

© ZIEHL-ABEGG SE TPL_PG_Datenblatt-V6-10 Release Date: 08.02.2013 Technical changes reserved

All rights reserved. Confidential and proprietary document, not to be disclosed or used except in accordance with applicable agreements. No disclosure to third parties, if not expressively agreed by ZA SE.

4. Connection diagram

1360-108XA

3~ motor, 2 speeds (Δ/Y switch over) with thermostatic switch (if built in).Without bridge when using speed change-overswitch.

U1	brown
V1	blue
W1	black
U2	red
V2	grey
W2	orange
TB	white

High speed/D-connection

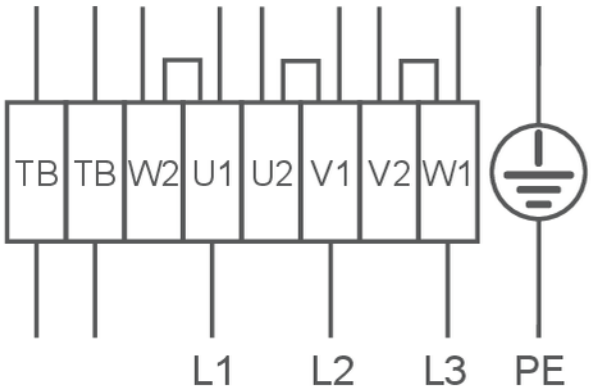

Low speed/Y-connection

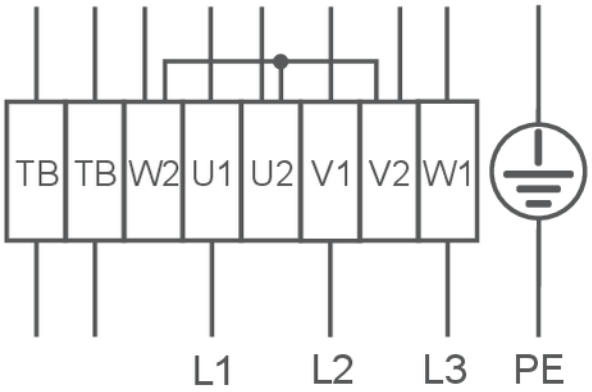

© ZIEHL-ABEGG SE TPL_PG_Datenblatt-V6-10 Release Date: 08.02.2013 Technical changes reserved

All rights reserved. Confidential and proprietary document, not to be disclosed or used except in accordance with applicable agreements. No disclosure to third parties, if not expressively agreed by ZA SE.