AE

Movement by Perfection



The Royal League in ventilation, control and drive technology



Product documentation

Type
FB063-6EK.4I.V4P

Article number
101680

ZIEHL-ABEGG

The Royal League
Die Königsklasse

Product documentation

Customer
Actrol

Project
Axial Fan

ZIEHL-ABEGG Contact
Kenz Zacharias
Tel. +61288832854
kenz.zacharias@ziehl-abegg.com.au

ZIEHL-ABEGG Subsidiary
Australia
ZIEHL-ABEGG Australia Pty Ltd (VIC)
181 Calarco Drive
Derrimut
VICTORIA 3030
AUSTRALIA
Phone +61 3 99310899
Fax +61 3 99310499
www.ziehl-abegg.com.au
info@ziehl-abegg.com.au

Type
FB063-6EK.4I.V4P

Article number
101680



Contents

1.	Product specification	3
2.	Characteristic Curve	4
3.	Drawing	5
4.	Connection diagram	6

© ZIEHL-ABEGG SE TPL_PG_Datenblatt-V6-10 Release Date: 08.02.2013 Technical changes reserved

All rights reserved. Confidential and proprietary document, not to be disclosed or used except in accordance with applicable agreements. No disclosure to third parties, if not expressively agreed by ZA SE.

1. Product specification

Technical data

Article number	101680
Type	FB063-6EK.4I.V4P
Designation	Axial fan with sheet blades
Rated values	1~230V±10% 50Hz P_1 0,63kW 3.00A ΔI=0% 860/min 12.0uF/400V 40°C
Electrical connection	Terminal box K62
Min. operating temperature °C	-25***
Mounting type terminal box	Mounted on Stator
Type of protection	IP54
Thermal class	THCL155
Connection diagram	1360-104XA
Rating plate	1x fixed
Fitting position	H/Vu/Vo
Motor protection	thermal contact
Impregnation	Moisture and hot climate protection
Quality of bearings	ball bearing with long-time lubrication
Material Rotor	Aluminium
Painting rotor	Rotor 1 coat painted
colour rotor	RAL 9005 (jet black)
Material blades	Aluminium
Painting impeller	1 coat painted
Colour blades	RAL 9005 (jet black)
Control	--
Painting mot.suspens	Motor suspension 1 coat paint
colour suspension	RAL 9005 (jet black)
Weight kg	12,80
ErP Data	Efficiency η_{statA}: 28,3 % Efficiency grade: N_{actual} = 36,1 / N_{target} = 36* *ErP 2013* Does not comply with the stipulations of the ErP regulations

*** Occasional operation ≤ -20°C and in consideration of lowest temperature according to product documentation permissible. For cooling applications with continuous operation ≤ -20°C cold design on request.

© ZIEHL-ABEGG SE TPL_PG_Datenblatt-V6-10 Release Date: 08.02.2013 Technical changes reserved

All rights reserved. Confidential and proprietary document, not to be disclosed or used except in accordance with applicable agreements. No disclosure to third parties, if not expressively agreed by ZA SE.

2. Characteristic Curve

FB063-6EK.4I.V4P

1~ 230V 50Hz Messdichte 1,16

Air performance

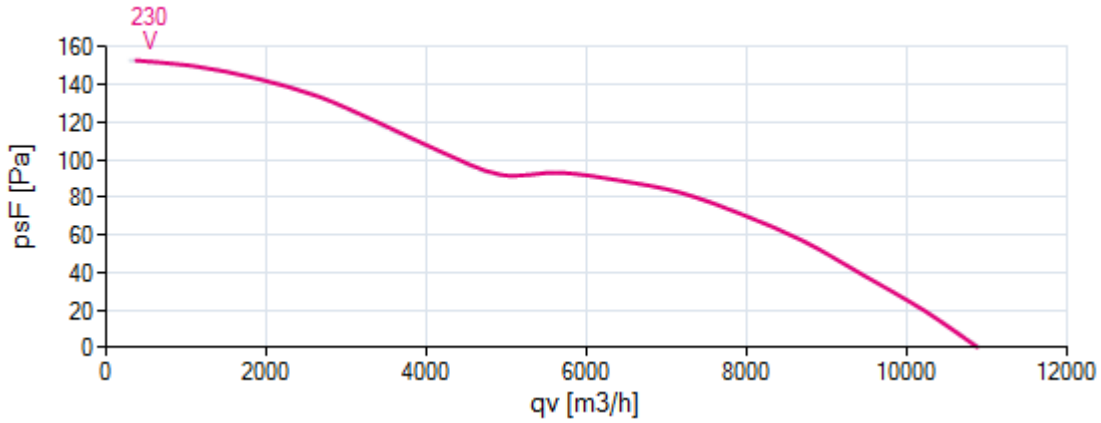

Acoustics

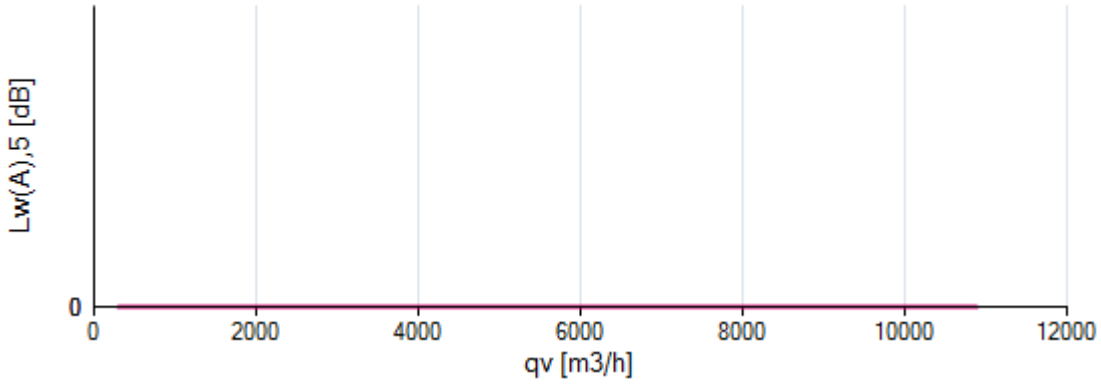

Power input

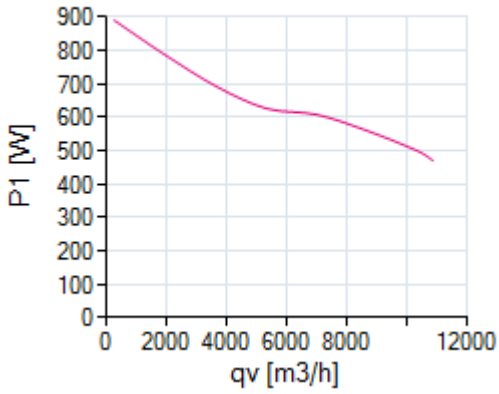

Efficiency

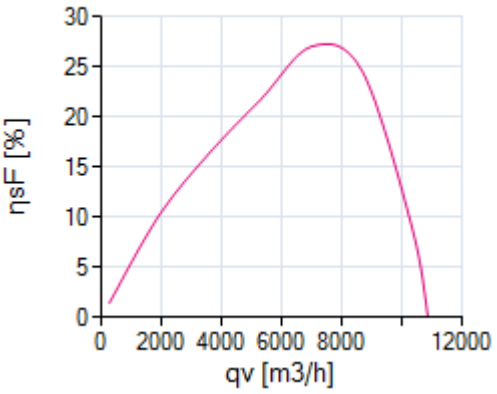

Please note: It's not allowed to use this fan in the stall area!*

*In doubt please ask your responsible ZIEHL-ABEGG sales contact.

© ZIEHL-ABEGG SE TPL_PG_Datenblatt-V6-10 Release Date: 08.02.2013 Technical changes reserved

All rights reserved. Confidential and proprietary document, not to be disclosed or used except in accordance with applicable agreements. No disclosure to third parties, if not expressively agreed by ZA SE.

3. Drawing

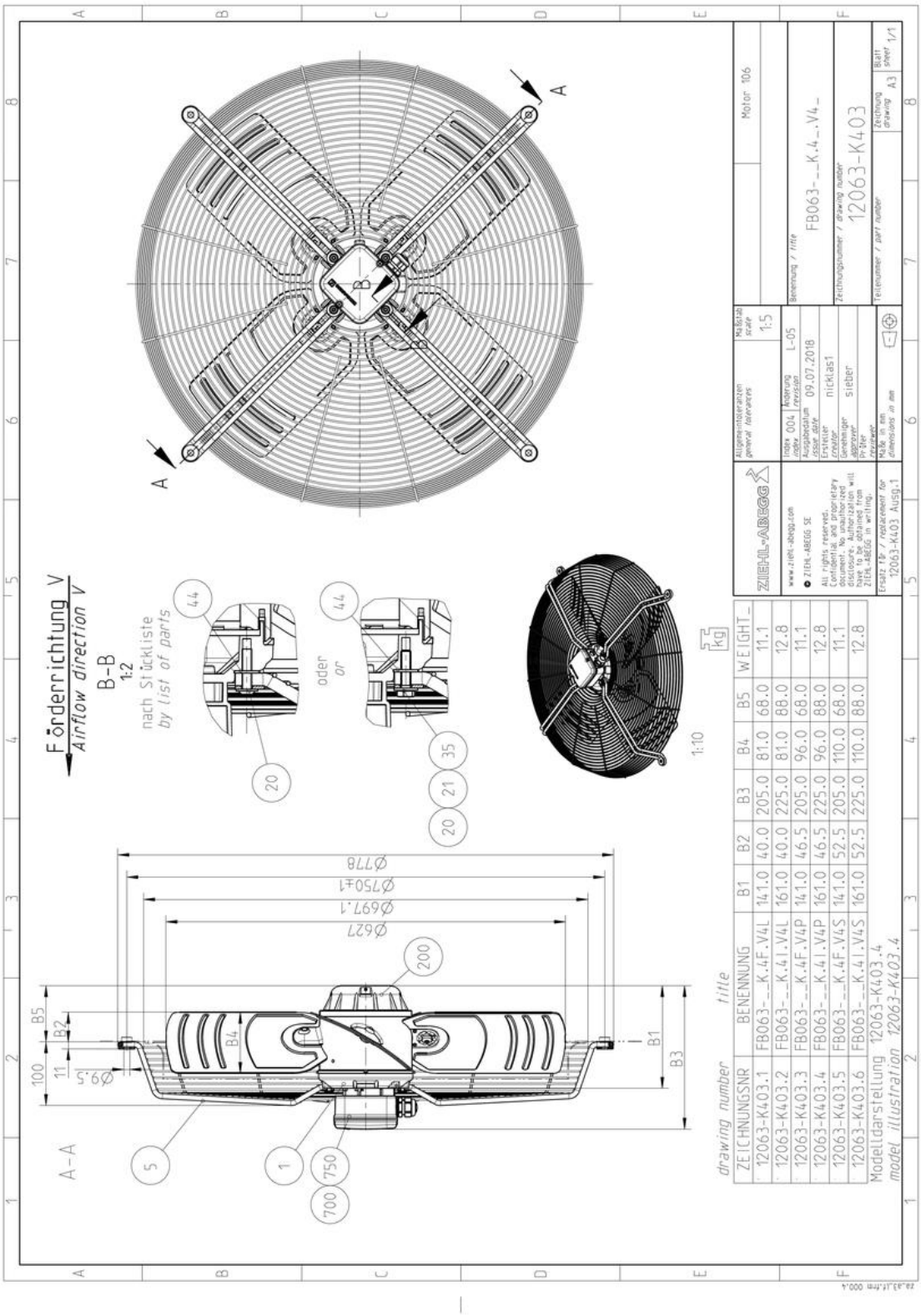

Dimensions in mm

Shown drawing is just to show the dimensions of the fan.

© ZIEHL-ABEGG SE TPL_PG_Datenblatt-V6-10 Release Date: 08.02.2013 Technical changes reserved

All rights reserved. Confidential and proprietary document, not to be disclosed or used except in accordance with applicable agreements. No disclosure to third parties, if not expressively agreed by ZA SE.

4. Connection diagram

1360-104XA

1~Motor with capacitor and thermostatic switch (if built in).

BN	brown
BU	blue
BK	black
OG	orange
WH	white
GNYE	green-yellow

Clockwise rotation

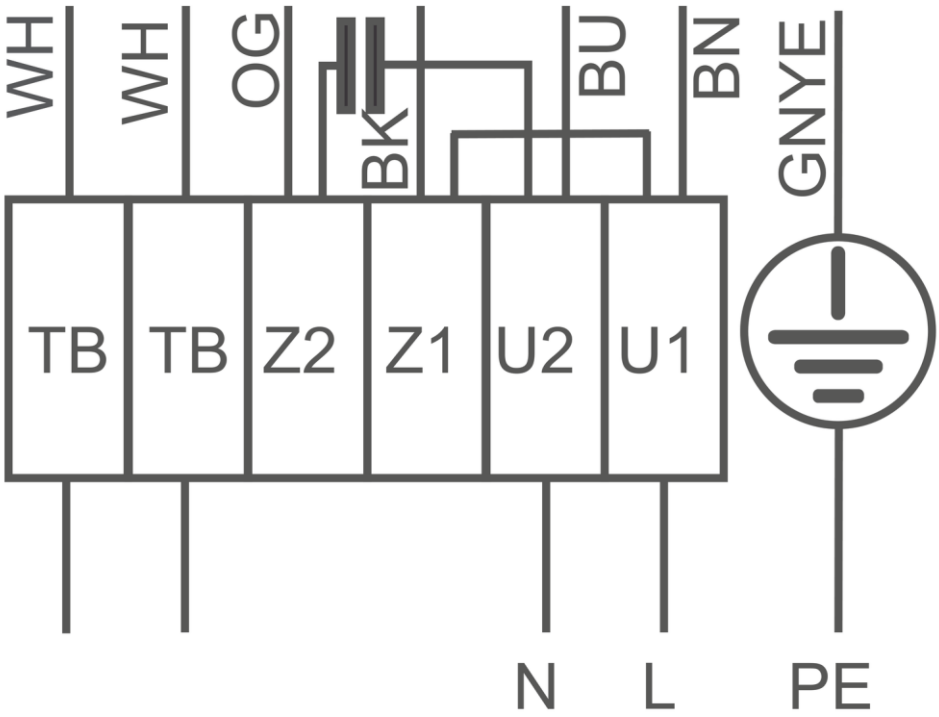

© ZIEHL-ABEGG SE TPL_PG_Datenblatt-V6-10 Release Date: 08.02.2013 Technical changes reserved

All rights reserved. Confidential and proprietary document, not to be disclosed or used except in accordance with applicable agreements. No disclosure to third parties, if not expressively agreed by ZA SE.



The Royal League in ventilation, **control** and drive technology

Intelligent control technology for any application

ZIEHL-ABEGG system capabilities:
Everything from a single source – perfectly matched for optimal performance

Please contact us. We would be pleased to design an individual solution for your requirements.

We would like to welcome you on our worldwide exhibitions. Please find our next exhibitions here.

© ZIEHL-ABEGG SE TPL_PG_Datenblatt-V6-10 Release Date: 08.02.2013 Technical changes reserved

All rights reserved. Confidential and proprietary document, not to be disclosed or used except in accordance with applicable agreements. No disclosure to third parties, if not expressively agreed by ZA SE.