EC Radial plug fan, Φ280mm
ECF(K)6D280-PLHDAL1Y-RF



Performance curve

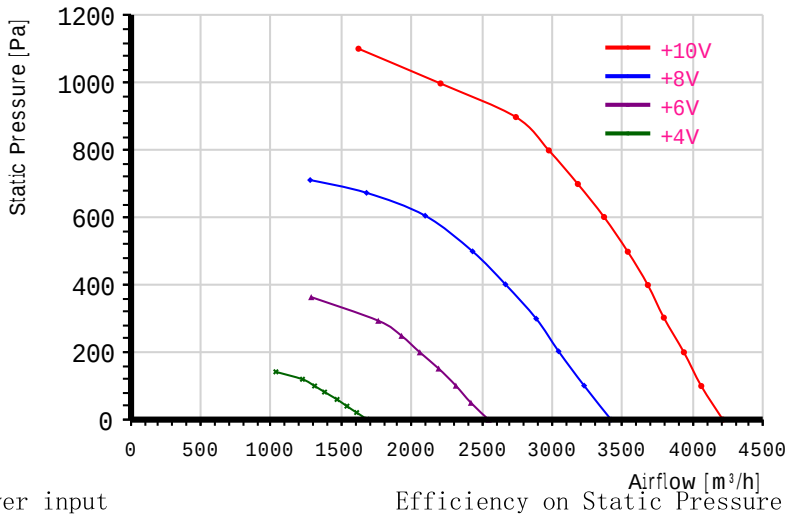

Power input

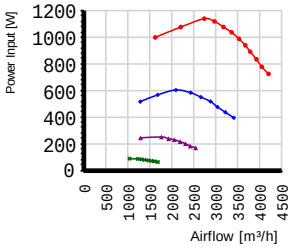

Efficiency on Static Pressure

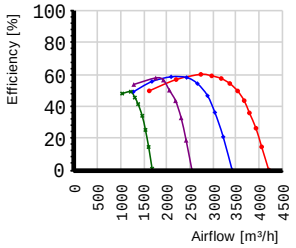

Product Features

☞Motor technology:EC
☞Supply voltage:3P,380~480V
☞Supply frequency:50/60 Hz
☞Rated voltage:400 VAC
☞Power input:1140 W
☞Current:1.86 A
☞Speed:3270 r/min
☞Perm.amb.temp:-25℃~+50℃
☞Inlet type:Single Inlet
☞Rotation:Counter-clockwise(Seen from cable exit)
☞Protection class:IP54
☞Insulation class:F
☞Impeller material:Sheet aluminium
☞Acoustic:74 dB(A)
☞Controller:Integrated(Cable line),0~10V PWM
☞Housing:Without housing; With inlet ring; With bracket; With panel;

Wiring diagram

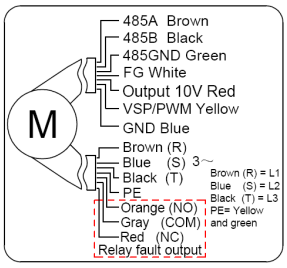

Dimensions (in mm) K-Factor=93

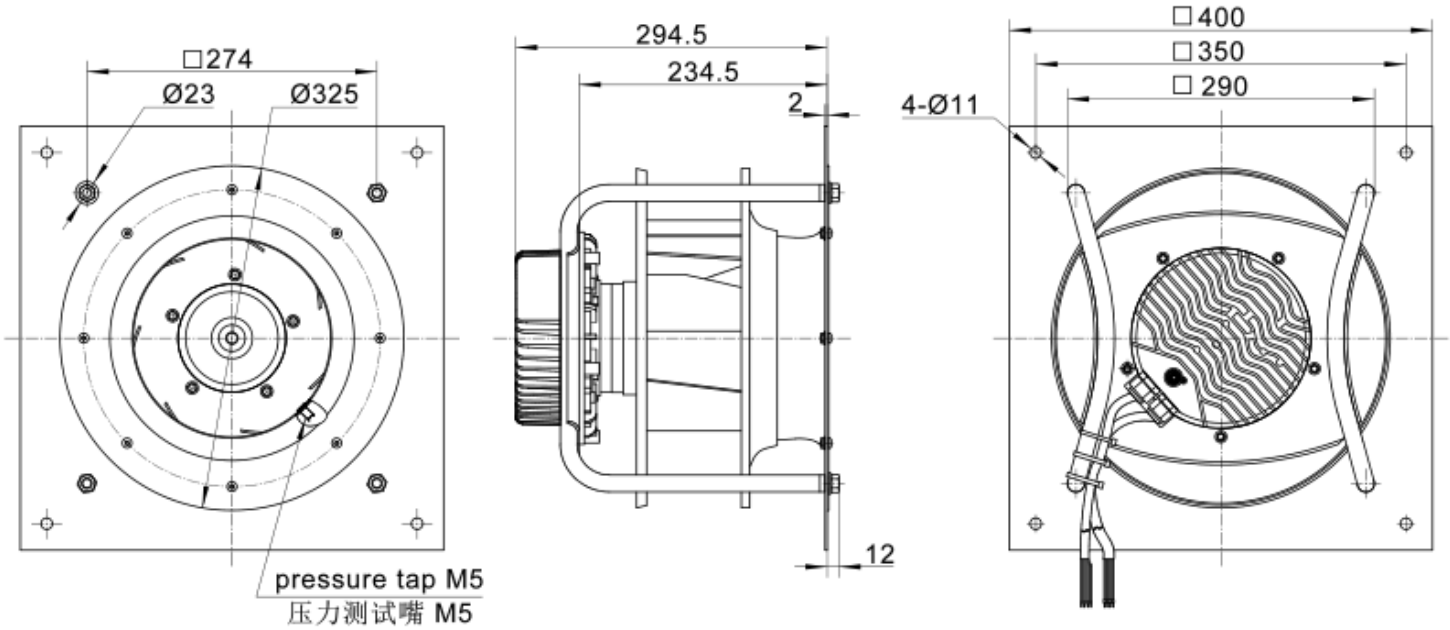

2024-06-07 09:57 Exported from MZFan Selector(V2.6.3.0) DB serialNo=58713