S4E300-EE20-06

AC axial fan

blades with special design (K series)

with guard grille for short nozzle



ebm-papst Mulfingen GmbH & Co. KG
Bachmühle 2 · D-74673 Mulfingen
Phone +49 7938 81-0
Fax +49 7938 81-110
info1@de.ebmpapst.com
www.ebmpapst.com

Limited partnership · Headquarters Mulfingen
Amtsgericht (court of registration) Stuttgart · HRA 590344

General partner Elektrobau Mulfingen GmbH · Headquarters Mulfingen
Amtsgericht (court of registration) Stuttgart · HRB 590142

Nominal data

Type	**S4E300-EE20-06**
Motor	**M4E068-BF**

Phase		1~	1~
Nominal voltage	VAC	230	230
Frequency	Hz	50	60
Method of obtaining data		fa	fa
Valid for approval/standard		CE	CE
Speed (rpm)	min^{-1}	1100	1150
Power consumption	W	52	60
Current draw	A	0.23	0.27
Capacitor	µF	1.5	1.5
Capacitor voltage	VDB	400	400
Max. back pressure	Pa	50	50
Max. back pressure	in. wg	0.2	0.2
Min. ambient temperature	°C	-25	-25
Max. ambient temperature	°C	45	40
Starting current	A	0.28	0.29

ml = Max. load · me = Max. efficiency · fa = Free air · cs = Customer specification · ce = Customer equipment
Subject to change

AC axial fan

blades with special design (K series)

with guard grille for short nozzle

Technical description

Weight	2.1 kg
Size	300 mm
Motor size	68
Rotor surface	Painted black
Blade material	Press-fitted sheet steel blank, sprayed with PA plastic
Guard grille material	Steel, phosphated and coated with black plastic (RAL 9005)
Number of blades	5
Airflow direction	A
Direction of rotation	Counterclockwise, viewed toward rotor
Degree of protection	IP44; installation- and position-dependent as per EN 60034-5
Insulation class	"B"
Moisture (F) / Environmental (H) protection class	H1
Max. permitted ambient temp. for motor (transport/storage)	+80 °C
Min. permitted ambient temp. for motor (transport/storage)	-40 °C
Installation position	Shaft horizontal or rotor on bottom; rotor on top on request
Condensation drainage holes	On rotor side
Mode	S1
Motor bearing	Ball bearing
Touch current according to IEC 60990 (measuring circuit Fig. 4, TN system)	< 0.75 mA
Motor protection	Thermal overload protector (TOP) internally connected
With cable	Variable
Protection class	I (with customer connection of protective earth)
Conformity with standards	EN 60335-1; CE
Approval	EAC

ebm-papst Mulfingen GmbH & Co. KG · Bachmühle 2 · D-74673 Mulfingen · Phone +49 (0) 7938 81-0 · Fax +49 (0) 7938 81-110 · info1@de.ebmpapst.com · www.ebmpapst.com

AC axial fan

blades with special design (K series)

with guard grille for short nozzle

Product drawing

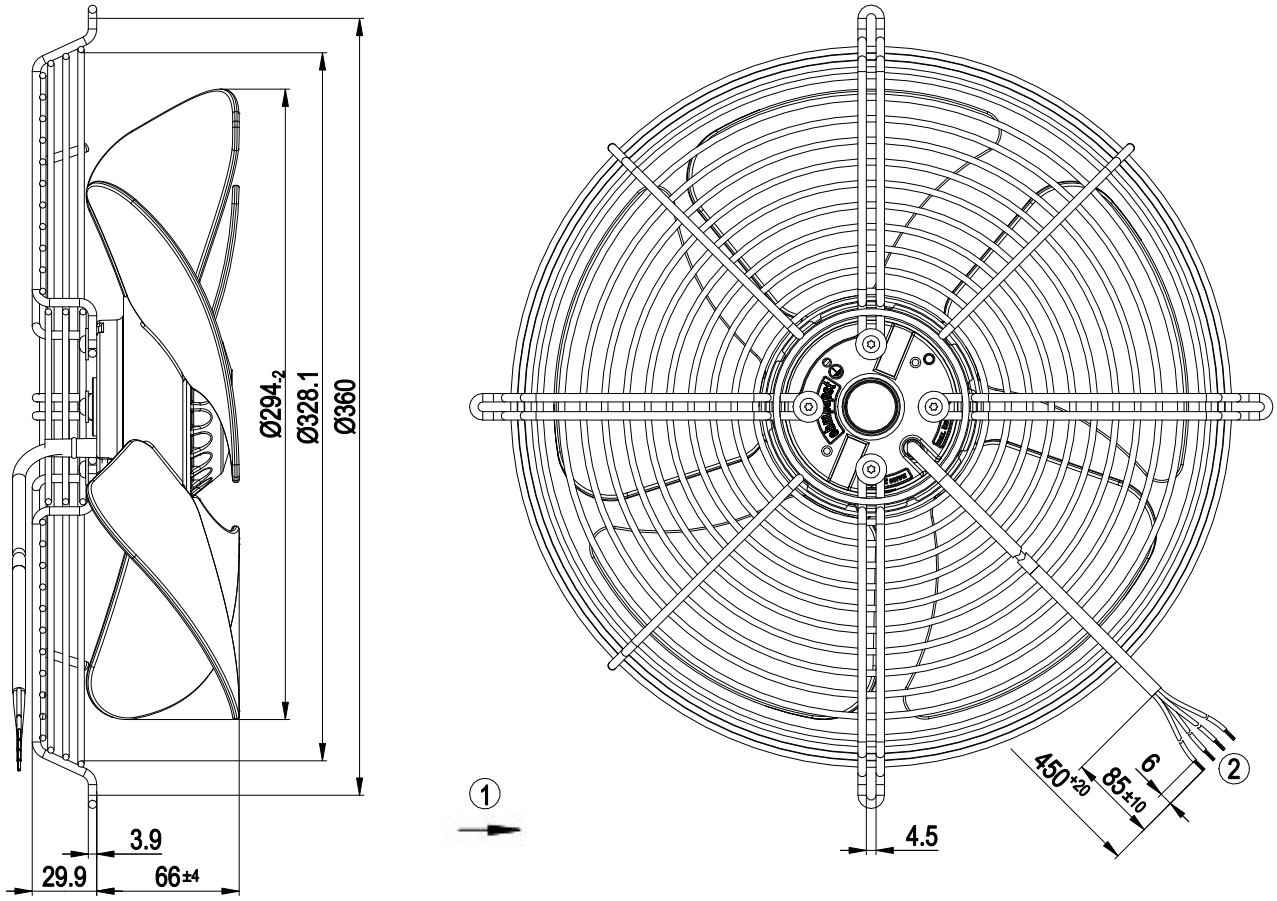

1	Airflow direction " A"
2	Cable PVC 4G 0.5 mm², 4x crimped splices

ebm-papst Mulfingen GmbH & Co. KG · Bachmühle 2 · D-74673 Mulfingen · Phone +49 (0) 7938 81-0 · Fax +49 (0) 7938 81-110 · info1@de.ebmpapst.com · www.ebmpapst.com

AC axial fan

blades with special design (K series)

with guard grille for short nozzle

Connection diagram

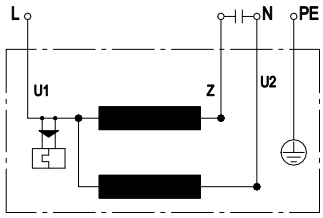

U1	blue	Z	brown	U2	black
PE	green/yellow				

ebm-papst Mulfingen GmbH & Co. KG · Bachmühle 2 · D-74673 Mulfingen · Phone +49 (0) 7938 81-0 · Fax +49 (0) 7938 81-110 · info1@de.ebmpapst.com · www.ebmpapst.com

AC axial fan

blades with special design (K series)

with guard grille for short nozzle

Curves: Air performance 50 Hz

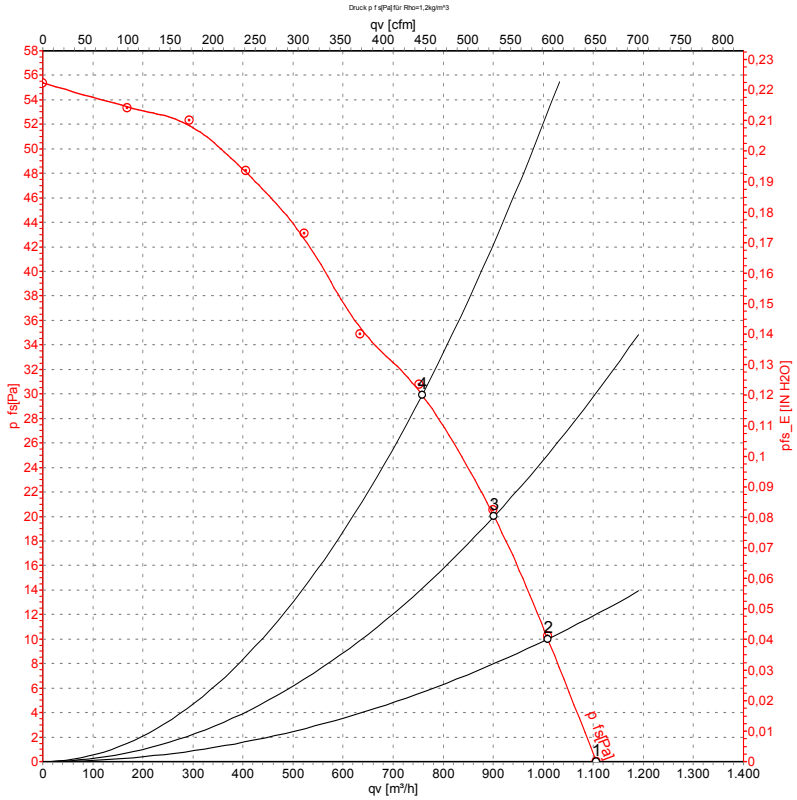

Measurement: LU-29626-1

Air performance measured according to ISO 5801 installation category A. For detailed information on the measurement setup, contact ebm-papst. Intake sound level: Sound power level according to ISO 13347 / sound pressure level measured at 1 m distance from fan axis. The values given are valid under the specified measuring conditions and may vary due to conditions of installation. For deviations from the standard configuration, the parameters have to be checked on the installed unit.

Measured values

	U	f	n	P_e	I	q_V	p_{fs}	q_V	p_{fs}
	V	Hz	min^{-1}	W	A	m^3/h	Pa	cfm	in. wg
1	230	50	1100	52	0.23	1105	0	650	0.00
2	230	50	1075	53	0.23	1010	10	595	0.04
3	230	50	1060	53	0.23	900	20	530	0.08
4	230	50	1045	54	0.23	760	30	445	0.12

U = Voltage · f = Frequency · n = Speed (rpm) · P_e = Power consumption · I = Current draw · q_V = Air flow · p_{fs} = Pressure increase

ebm-papst Mulfingen GmbH & Co. KG · Bachmühle 2 · D-74673 Mulfingen · Phone +49 (0) 7938 81-0 · Fax +49 (0) 7938 81-110 · info1@de.ebmpapst.com · www.ebmpapst.com

AC axial fan

blades with special design (K series)

with guard grille for short nozzle

Curves: Air performance 60 Hz

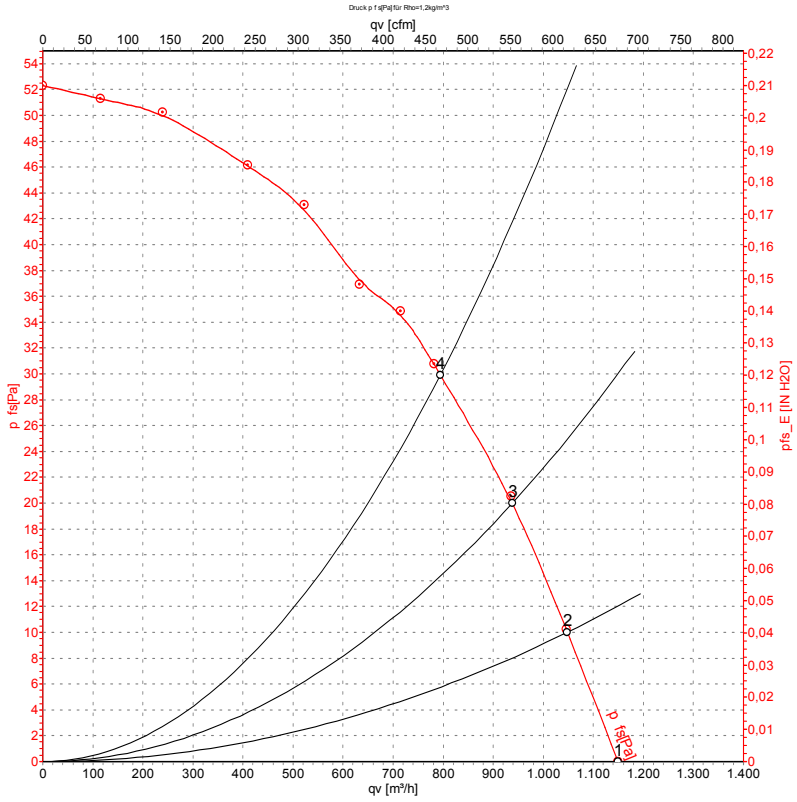

Measurement: LU-29627-1

Air performance measured according to ISO 5801 installation category A. For detailed information on the measurement setup, contact ebm-papst. Intake sound level: Sound power level according to ISO 13347 / sound pressure level measured at 1 m distance from fan axis. The values given are valid under the specified measuring conditions and may vary due to conditions of installation. For deviations from the standard configuration, the parameters have to be checked on the installed unit.

Measured values

	U	f	n	P_e	I	q_V	p_{fs}	q_V	p_{fs}
	V	Hz	min^{-1}	W	A	m^3/h	Pa	cfm	in. wg
1	230	60	1150	60	0.27	1150	0	675	0.00
2	230	60	1110	60	0.27	1050	10	615	0.04
3	230	60	1085	61	0.27	940	20	550	0.08
4	230	60	1065	61	0.27	795	30	465	0.12

U = Voltage · f = Frequency · n = Speed (rpm) · P_e = Power consumption · I = Current draw · q_V = Air flow · p_{fs} = Pressure increase

ebm-papst Mulfingen GmbH & Co. KG · Bachmühle 2 · D-74673 Mulfingen · Phone +49 (0) 7938 81-0 · Fax +49 (0) 7938 81-110 · info1@de.ebmpapst.com · www.ebmpapst.com