AC Backward curved centrifugal fan, 2 poles, Φ225mm
YWF(K)2E225-GH



Performance curve

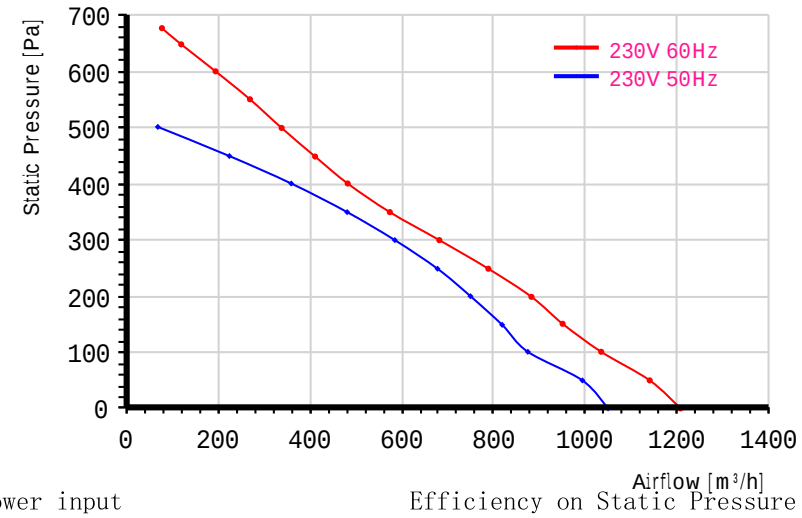

Power input

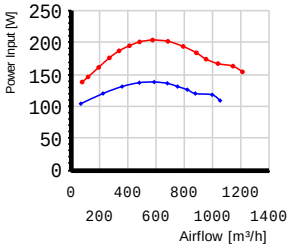

Efficiency on Static Pressure

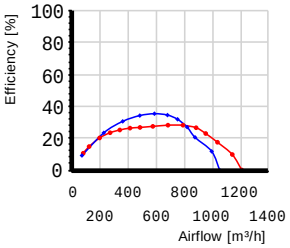

Product Features

- ☞Motor technology:AC
- ☞Supply voltage:1P
- ☞Supply frequency:50/60 Hz
- ☞Rated voltage:230 VAC
- ☞Power input:150/200 W
- ☞Current:0.7/0.95 A
- ☞Speed:2600/3000 r/min
- ☞Perm.amb.temp:-25℃~+50℃
- ☞Inlet type:Single Inlet
- ☞Rotation:Counter-clockwise(Seen from cable exit)
- ☞Protection class:IP54
- ☞Insulation class:F
- ☞Impeller material:Galvanised sheet steel
- ☞Acoustic:73/75 dB(A)
- ☞Thermal Protector:Can be configured as requirements
- ☞Capacitor:4 uF
- ☞Housing:Without housing; With inlet ring;

Wiring diagram(Default without thermal protector)

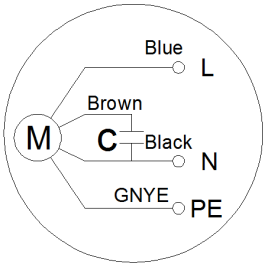

Dimensions mm

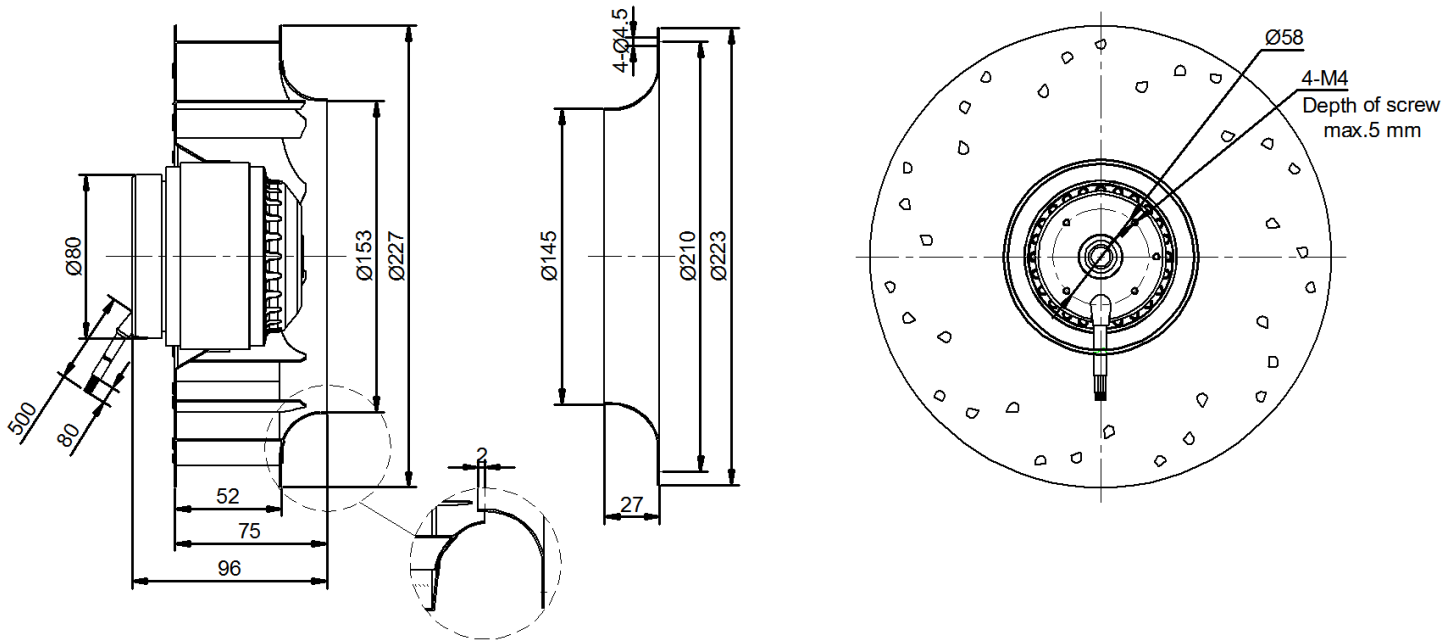

2023-12-11 14:45 Exported from MZFan Selector(V2.4.2.0) DB serialNo=45000