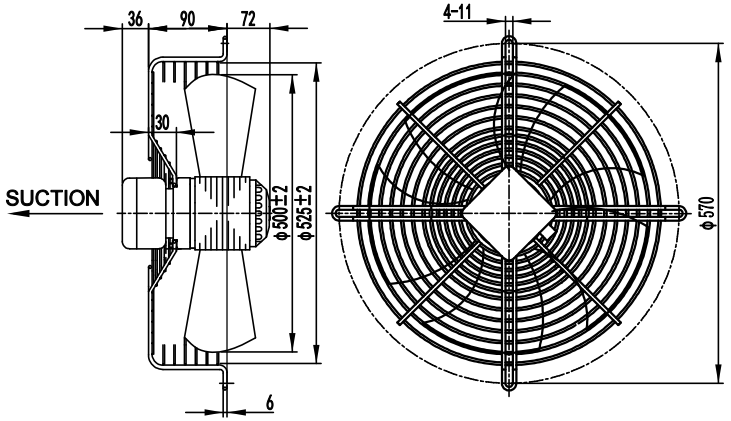

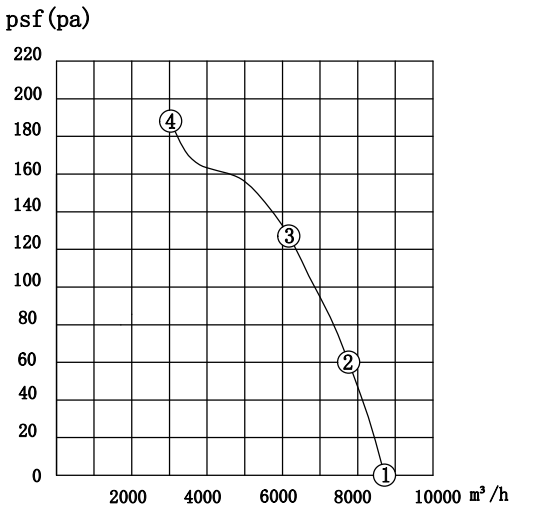

PS: Fan working performance tested with Maer wall plate, and under standard atmospheric pressure at 20 ℃.

MAER	Product model: YSWF102L60P4-570N-500 S
	product type: External rotor axial flow fan
	customer code: /
	Product number: /
	certification: CE、CCC

Condition of use:

1）voltage and frequency：3～380V±5％ 50Hz 。
2）Lead cable:Terminal block, the recommended standard of lead wire is not less than 0.75 mm².
3）Installation position: vertical or upward.
4) ambient temperature:-40～65℃。

The external wiring diagram:

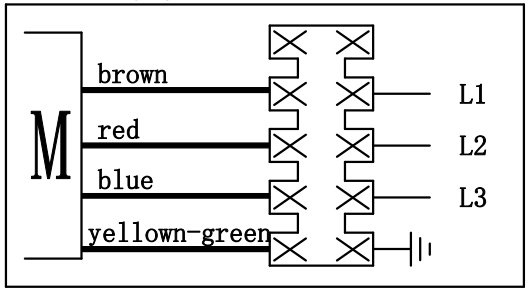

Wiring diagram:

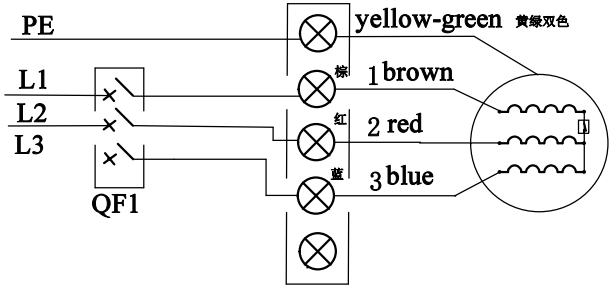

Performance parameters at key point:

	psf (pa)	I (A)	P1 (W)	n (r/min)	Q (m³/h)	Note
①	0	1.22	611	1395	8718	
②	60	1.29	670	1383	7765	
③	127	1.37	733	1369	6178	MAX EFF.
④	188	1.46	803	1354	3045	IMAX

MARK

MAER MOTORS & FANS AXIAL FAN MOTOR
MODEL: YSWF102L60P4-570N-500 SUCTION
VOLTAGE:3～380V/50Hz
N.W/G.W. / KG
MEAS: 55X55X22
CL.F WITH TERMINAL BOX
XXXXXXX

Technical specification:

1.All parts of fan should be properly assembled, no oil or dirt on the surface, no obvious distortion, mechanical damage and other defects.
2.Fan rotation is flexible, no delay, no operation sound, no scratch and other undesirable phenomena.
3.The safety requirement of fan is performed according to GB12350-2000, the electrical strength is 1800Vmin, and the insulation resistance is not less than 100M at room temperature.
4.Motor insulation class, F CLASS.
5.Motor protection level, IP54, fan protection level, IP2X.
6.The fan balance level is:1380±10%r/min high than G6.3, vibration value is less than 5.4mm/s.
7.With 500 mesh cover N90.
8.WITH TERMINAL BOX, box with foam.
9.With TPI bearing.

Test data at free :

connection	UAC (V)±5%	F (Hz)	P1 (W) ±10%	I (A)±10%	n (r/min) ±10%	Noise dB(A)
	3～380	50	700	1.32	1380	73

Nameplate:

YSWF102L60P4-570N-500 S 3～380V/50Hz
733W 1.37A 1369r/min @ 127Pa
η sf=29.72% N=40 CL.F IP54 2022/09

版本/Ver.		Page	
重量/WG.	Kg	签名/Name	日期/Date
绘图/Drawing			
审核/Checked			
批准/Approved			
客户确认/Customer confirmation			

浙江马尔风机有限公司
MAER Fan Motor ZHEJIANG MAER FAN MOTOR CO.,LTD.
产品规格书
Product Specification
型号/Model: YSWF102L60P4-570N-500 S
品号 P/N: