8317073686

AC axial fan

sickle-shaped blades (S series)

with guard grille for short nozzle

ebm-papst Ventilator (Shanghai) Co.,Ltd.

No.418, Hua Jing Road, Wai Gao Qiao Free Trade Zone, Pudong

Tel:+86(021)-50460183

www.ebmpapst.com

Nominal data

Type	8317073686
Motor	**M4D110-GF**

Phase		3~	3~
Nominal voltage	VAC	400	400
Wiring		Δ	Y
Frequency	Hz	50	50
Method of obtaining data		ml	ml
Valid for approval/standard		-	-
Speed (rpm)	min^{-1}	1325	1035
Power consumption	W	820	550
Current draw	A	1.59	0.95
Max. back pressure	Pa	160	100
Max. back pressure	inH2O	0.64	0.4
Min. ambient temperature	°C	-40	-40
Max. ambient temperature	°C	60	60
Starting current	A	6.5	2

ml = Max. load · me = Max. efficiency · fa = Free air · cs = Customer specification · ce = Customer equipment

Subject to change

ebmpapst

AC axial fan

sickle-shaped blades (S series)

with guard grille for short nozzle

Technical description

Weight	13.4 kg
Fan size	500 mm
Rotor surface	Cast in aluminum
Terminal box material	PP plastic
Blade material	Sheet aluminum
Guard grille material	Steel, coated with black plastic (RAL 9005)
Number of blades	5
Blade pitch	0
Airflow direction	"V"
Direction of rotation	Counterclockwise, viewed toward rotor
Degree of protection	IP54
Insulation class	"F"
Moisture (F) / Environmental (H) protection class	F3-1
Max. permitted ambient temp. for motor (transport/storage)	+ 80 °C
Min. permitted ambient temp. for motor (transport/storage)	- 40 °C
Installation position	Shaft horizontal or rotor on bottom; rotor on top on request
Condensation drainage holes	On rotor side
Mode	S1
Motor bearing	Ball bearing
Touch current according to IEC 60990 (measuring circuit Fig. 4, TN system)	<= 3.5 mA
Electrical hookup	Via terminal box
Motor protection	Thermal overload protector (TOP) with basic insulation
With cable	Axial
Protection class	I (with customer connection of protective earth)
Approval	CCC

AC axial fan

sickle-shaped blades (S series)

with guard grille for short nozzle

Product drawing

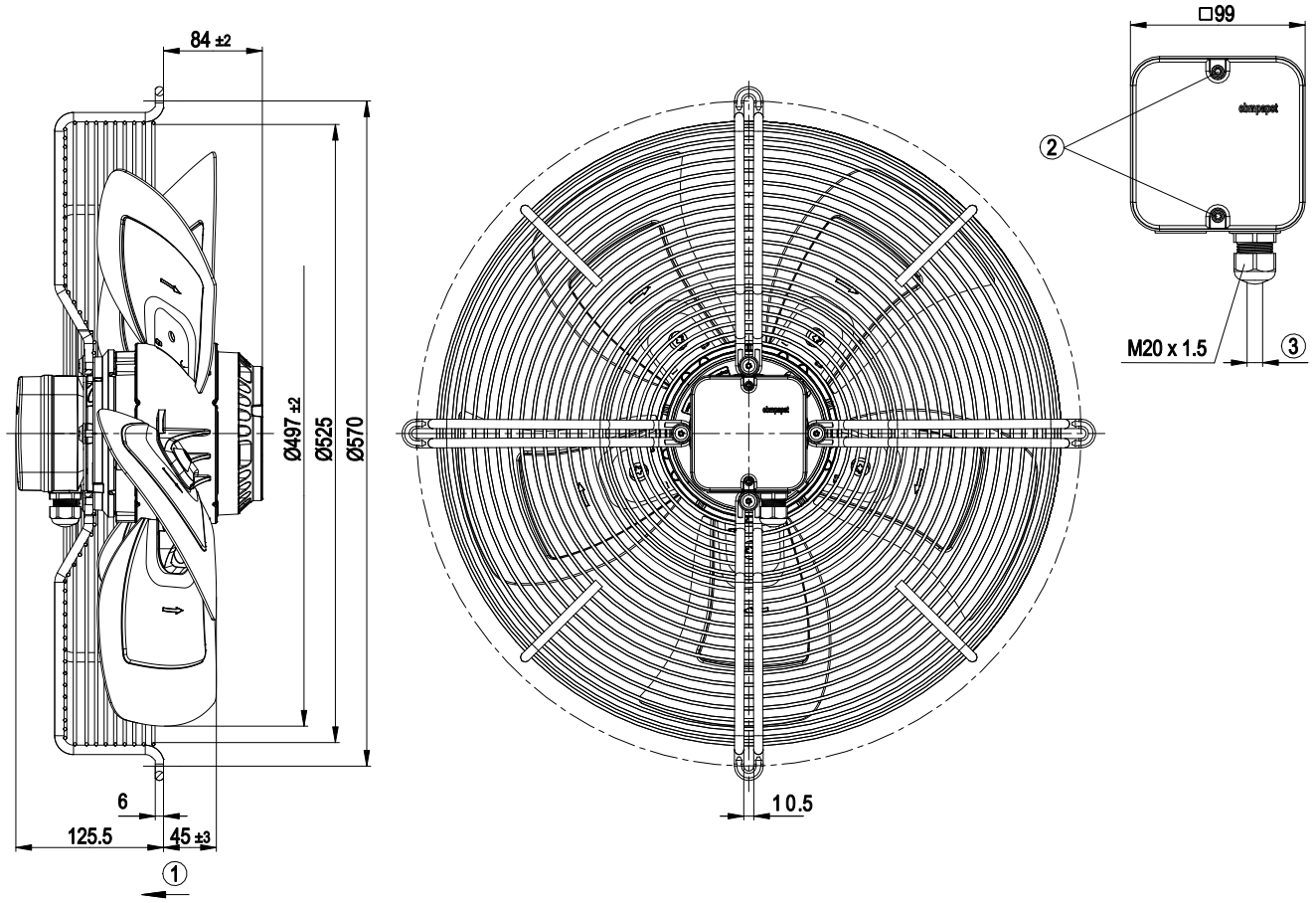

1	Direction of air flow "V"
2	Tightening torque 1.5 ± 0.2 Nm
3	Cable diameter: min. 6 mm, max. 12 mm; tightening torque 2 ± 0.3 Nm

ebmpapst

AC axial fan

sickle-shaped blades (S series)

with guard grille for short nozzle

Connection diagram

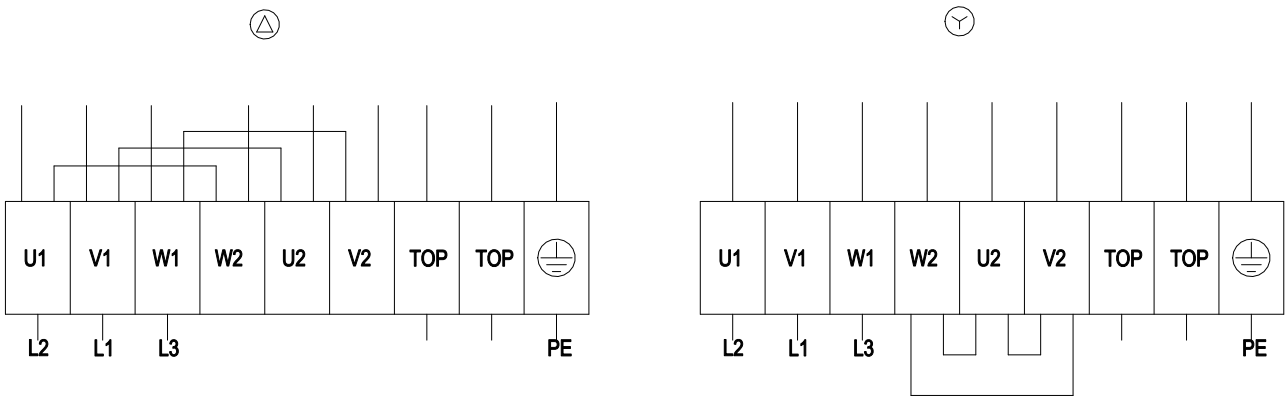

Δ	Delta connection	Y	Star connection	L1	= V1 = blue
L2	= U1 = black	L3	= W1 = brown	W2	yellow
U2	green	V2	white	TOP	2x gray
PE	green/yellow				

ebmpapst

AC axial fan

sickle-shaped blades (S series)

with guard grille for short nozzle

Curves: Air performance 50 Hz

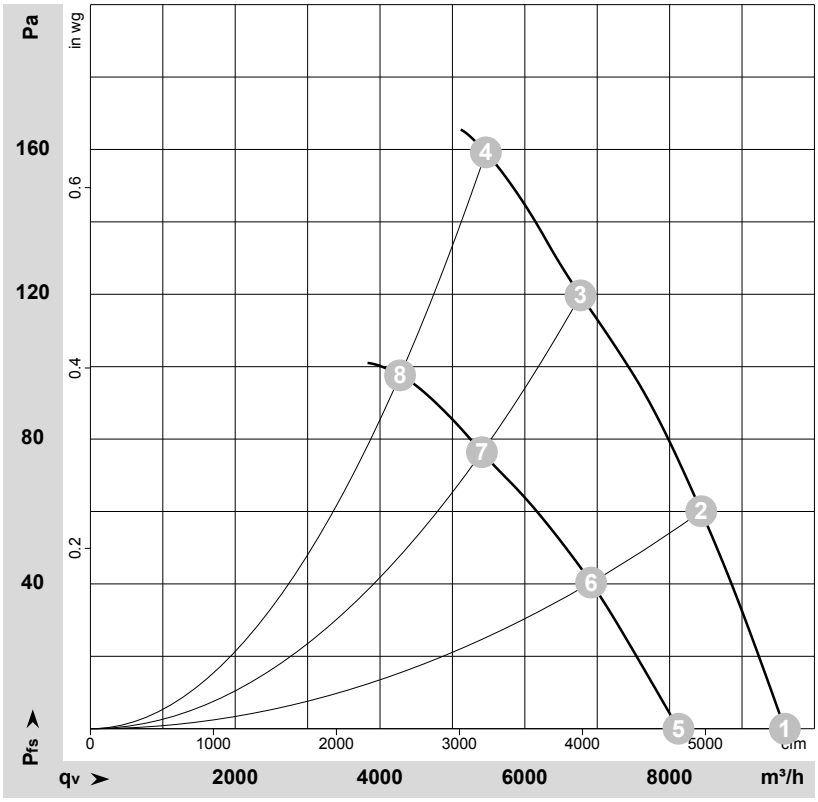

Measured values

	Wired	U	f	n	P_e	I	LpA_{in}	LwA_{in}	qv	p_{fs}	qv	p_{fs}
		V	Hz	min^{-1}	W	A	dB(A)	dB(A)	m^3/h	Pa	CFM	inH2O
1	Δ	400	50	1380	615	1.28	71	77	9590	0	5645	0.00
2	Δ	400	50	1360	687	1.37	71	77	8435	60	4965	0.24
3	Δ	400	50	1345	753	1.44	71	78	6770	120	3985	0.48
4	Δ	400	50	1325	820	1.59	74	80	5460	160	3215	0.64
5	Y	400	50	1160	454	0.76			8120	0	4780	0.00
6	Y	400	50	1115	492	0.82			6915	41	4070	0.16
7	Y	400	50	1070	521	0.87			5405	76	3180	0.31
8	Y	400	50	1035	550	0.95			4275	98	2515	0.39

Wired = Wiring · U = Power supply · f = Frequency · n = Speed (rpm) · P_e = Power consumption · I = Current draw · LpA_{in} = Sound pressure level intake side · LwA_{in} = Sound power level intake side
qv = Air flow · p_{fs} = Pressure increase

ebmpapst