8317074025

AC axial fan

sickle-shaped blades (S series)

ebm-papst Ventilator (Shanghai) Co.,Ltd.
No.418, Hua Jing Road, Wai Gao Qiao Free Trade Zone, Pudong
Tel:+86(021)-50460183
www.ebmpapst.com

Nominal data

Type	8317074025
Motor	**M4D094-FA**

Phase		3~	3~
Nominal voltage	VAC	400	400
Wiring		Δ	Y
Frequency	Hz	50	50
Method of obtaining data		ml	ml
Valid for approval/standard		CE	CE
Speed (rpm)	min^{-1}	1330	1040
Power consumption	W	460	310
Current draw	A	0.95	0.52
Max. back pressure	Pa	130	78
Max. back pressure	inH2O	0.52	0.31
Min. ambient temperature	°C	-40	-40
Max. ambient temperature	°C	65	65
Starting current	A	3.3	1.1

ml = Max. load · me = Max. efficiency · fa = Free air · cs = Customer specification · ce = Customer equipment
Subject to change

Data according to ErP Directive

		Actual	Req. 2015
01 Overall efficiency η_{es}	%	34.3	31.5
02 Measurement category		A	
03 Efficiency category		Static	
04 Efficiency grade N		42.8	40
05 Variable speed drive		No	

09 Power consumption P_e	kW	0.45
09 Air flow q_v	m^3/h	4530
09 Pressure increase p_{fs}	Pa	124
10 Speed (rpm) n	min^{-1}	1335
11 Specific ratio*		1.00

Data obtained at optimum efficiency level.
The ErP data is determined using a motor-impeller combination in a standardized measurement setup.

* Specific ratio = 1 + p_{fs} / 100 000 Pa

LU-108389

ebmpapst

AC axial fan

sickle-shaped blades (S series)

Technical description

Weight	5.9 kg
Fan size	450 mm
Rotor surface	Painted black
Terminal box material	ABS plastic
Blade material	Press-fitted sheet steel blank, sprayed with PP plastic
Number of blades	5
Airflow direction	"V"
Direction of rotation	Counterclockwise, viewed toward rotor
Degree of protection	IP54
Insulation class	"F"
Moisture (F) / Environmental (H) protection class	F4-1
Max. permitted ambient temp. for motor (transport/storage)	+80 °C
Min. permitted ambient temp. for motor (transport/storage)	-40 °C
Installation position	Shaft horizontal or rotor on bottom; rotor on top on request
Condensation drainage holes	On rotor side
Mode	S1
Motor bearing	Ball bearing
Touch current according to IEC 60990 (measuring circuit Fig. 4, TN system)	<= 3.5 mA
Electrical hookup	Via terminal box
Motor protection	Thermal overload protector (TOP) with basic insulation
Protection class	I (with customer connection of protective earth)
Conformity with standards	EN 60034-1 (2010); CE
Approval	CCC

AC axial fan

sickle-shaped blades (S series)

Product drawing

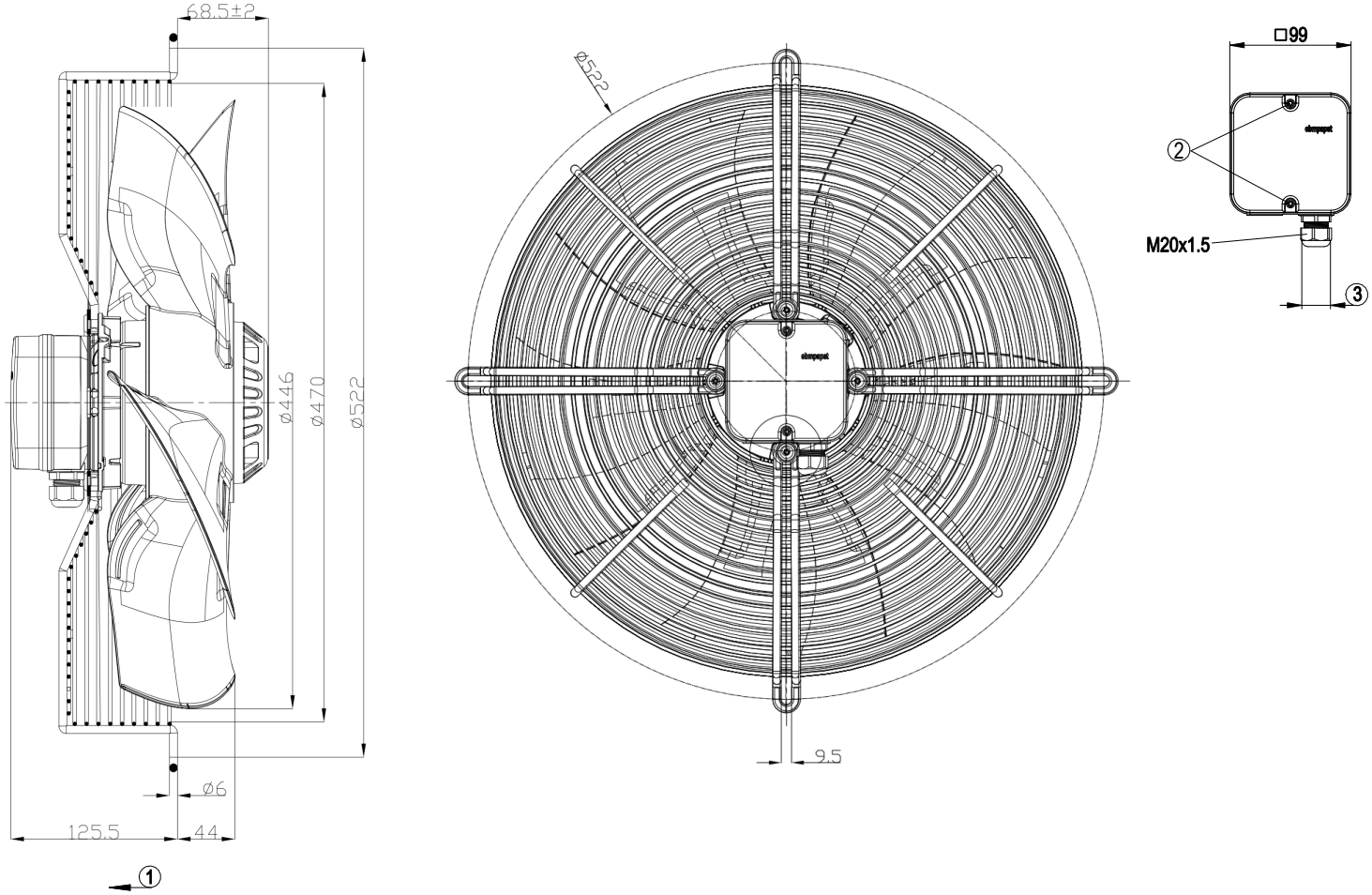

1	Direction of air flow "V"
2	Tightening torque 0.8 ± 0.15 Nm
3	Cable diameter: min. 6 mm, max. 12 mm; tightening torque 2±0.3 Nm

ebmpapst

AC axial fan

sickle-shaped blades (S series)

Connection diagram

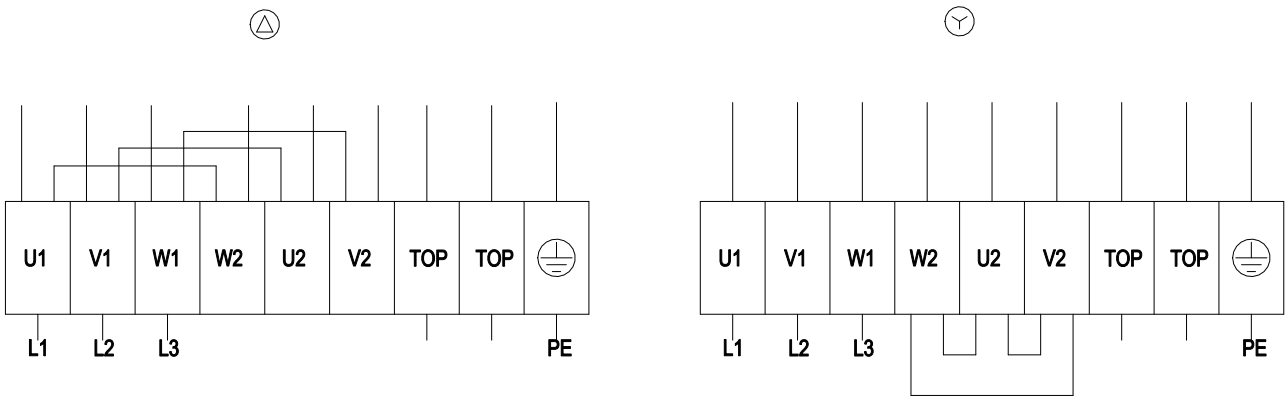

Δ	Delta connection	Y	Star connection	L1	= U1 = black
L2	= V1 = blue	L3	= W1 = brown	W2	yellow
U2	green	V2	white	TOP	2x gray
PE	green/yellow				

ebmpapst

AC axial fan

sickle-shaped blades (S series)

Curves: Air performance 50 Hz

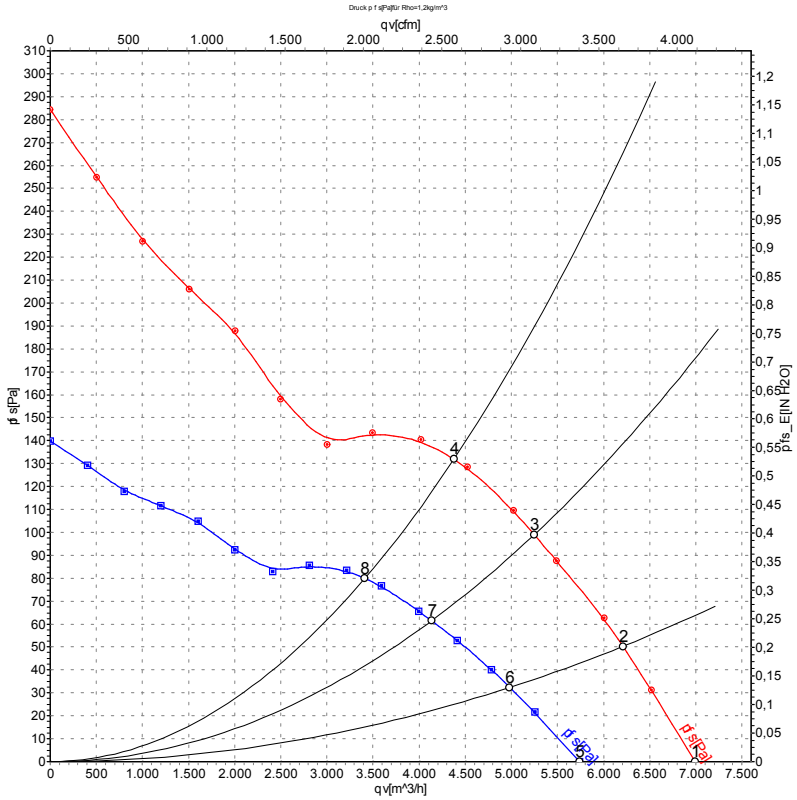

Measured values

	Wired	U	f	n	P_e	I	LpA_{in}	LwA_{in}	qv	p_{fs}	qv	p_{fs}
		V	Hz	min^{-1}	W	A	dB(A)	dB(A)	m^3/h	Pa	CFM	inH2O
1	Δ	400	50	1375	369	0.86	65	71	6995	0	4115	0.00
2	Δ	400	50	1360	410	0.90	62	68	6210	50	3655	0.20
3	Δ	400	50	1345	440	0.93	61	68	5250	100	3090	0.40
4	Δ	400	50	1330	460	0.95	62	69	4380	130	2575	0.52
5	Y	400	50	1145	269	0.45	61	67	5740	0	3375	0.00
6	Y	400	50	1090	293	0.49	58	64	4980	32	2930	0.13
7	Y	400	50	1060	306	0.51	56	62	4135	62	2435	0.25
8	Y	400	50	1040	310	0.52	57	63	3410	80	2005	0.32

Wired = Wiring · U = Power supply · f = Frequency · n = Speed (rpm) · P_e = Power consumption · I = Current draw · LpA_{in} = Sound pressure level intake side · LwA_{in} = Sound power level intake side
qv = Air flow · p_{fs} = Pressure increase

ebmpapst