R3G560-8317081579
8317081579

EC centrifugal fan - RadiCal

backward-curved, single-intake

ebm-papst Ventilator (Shanghai) Co.,Ltd.
No.418, Hua Jing Road, Pilot Free Trade Zone, Pudong District
Shanghai, China, 200131
Tel: +86(0)21-50460183
www.ebmpapst.com

Nominal data

Type	**R3G560-8317081579**
Motor	**M3G150-FF**

Phase		3~
Nominal voltage	VAC	400
Nominal voltage range	VAC	380 .. 480
Frequency	Hz	50/60
Method of obtaining data		ml
Status		prelim.
Speed (rpm)	min^{-1}	1900
Power consumption	W	3950
Current draw	A	6
Min. ambient temperature	°C	-40
Max. ambient temperature	°C	40

ml = Max. load · me = Max. efficiency · fa = Free air · cs = Customer specification · ce = Customer equipment
Subject to change

EC centrifugal fan - RadiCal

backward-curved, single-intake

Technical description

Weight	20.9 kg
Size	560 mm
Motor size	150
Rotor surface	Painted black
Electronics housing material	Die-cast aluminum
Impeller material	PP plastic
Number of blades	6
Direction of rotation	Clockwise, viewed toward rotor
Degree of protection	IP55
Insulation class	"F"
Moisture (F) / Environmental (H) protection class	H1
Ambient temperature note	Occasional start-up at temperatures between -40°C and -25°C is permitted. For continuous operation at ambient temperatures below -25°C (such as refrigeration applications), use must be made of a fan design with special low-temperature bearings.
Max. permitted ambient temp. for motor (transport/storage)	+80 °C
Min. permitted ambient temp. for motor (transport/storage)	-40 °C
Installation position	Shaft horizontal or rotor on bottom; rotor on top on request
Condensation drainage holes	On rotor side
Mode	S1
Motor bearing	Ball bearing
Technical features	- Operation and alarm display with LED - External 15-50 VDC input (parameterization) - Alarm relay - Integrated PI controller - Configurable inputs/outputs (I/O) - MODBUS V6.0 - Motor current limitation - RFID - ISO 15693 compatible - RS-485 MODBUS-RTU - Soft start - Voltage output 3.3-24 VDC, Pmax = 800 mW - Control interface with SELV potential safely disconnected from the mains - Thermal overload protection for electronics/motor - Line undervoltage / phase failure detection
EMC immunity to interference	According to EN 61000-6-2 (industrial environment)
EMC interference emission	According to EN 61000-6-3 (household environment), except EN 61000-3-2 for professionally used equipment with a total rated power greater than 1 kW
Touch current according to IEC 60990 (measuring circuit Fig. 4, TN system)	<= 3.5 mA
Electrical hookup	Terminal box
Protection class	I (with customer connection of protective earth)
Conformity with standards	EN 61800-5-1; CE
Approval	EAC ; UL 1004-7 + 60730-1; CSA C22.2 No. 77 + CAN/CSA-E60730-1

EC centrifugal fan - RadiCal

backward-curved, single-intake

Product drawing

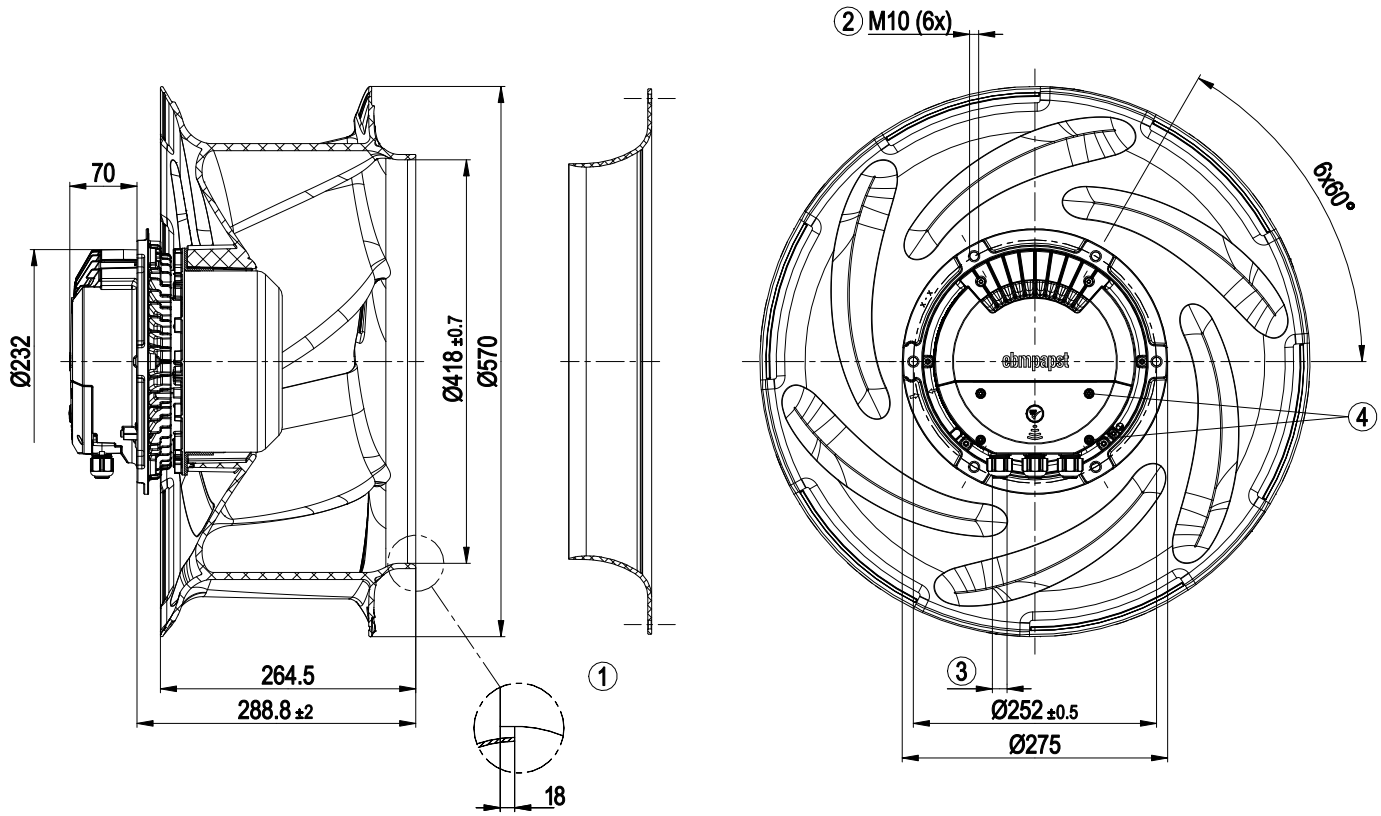

1	Accessory part: Inlet ring 56902-2-2943 not included in scope of delivery
2	Max. clearance for screw 20 mm
3	Cable diameter min. 4 mm, max. 10 mm, tightening torque 4 ± 0.6 Nm
4	Tightening torque 1.5 ± 0.2 Nm

EC centrifugal fan - RadiCal

backward-curved, single-intake

Accessory part

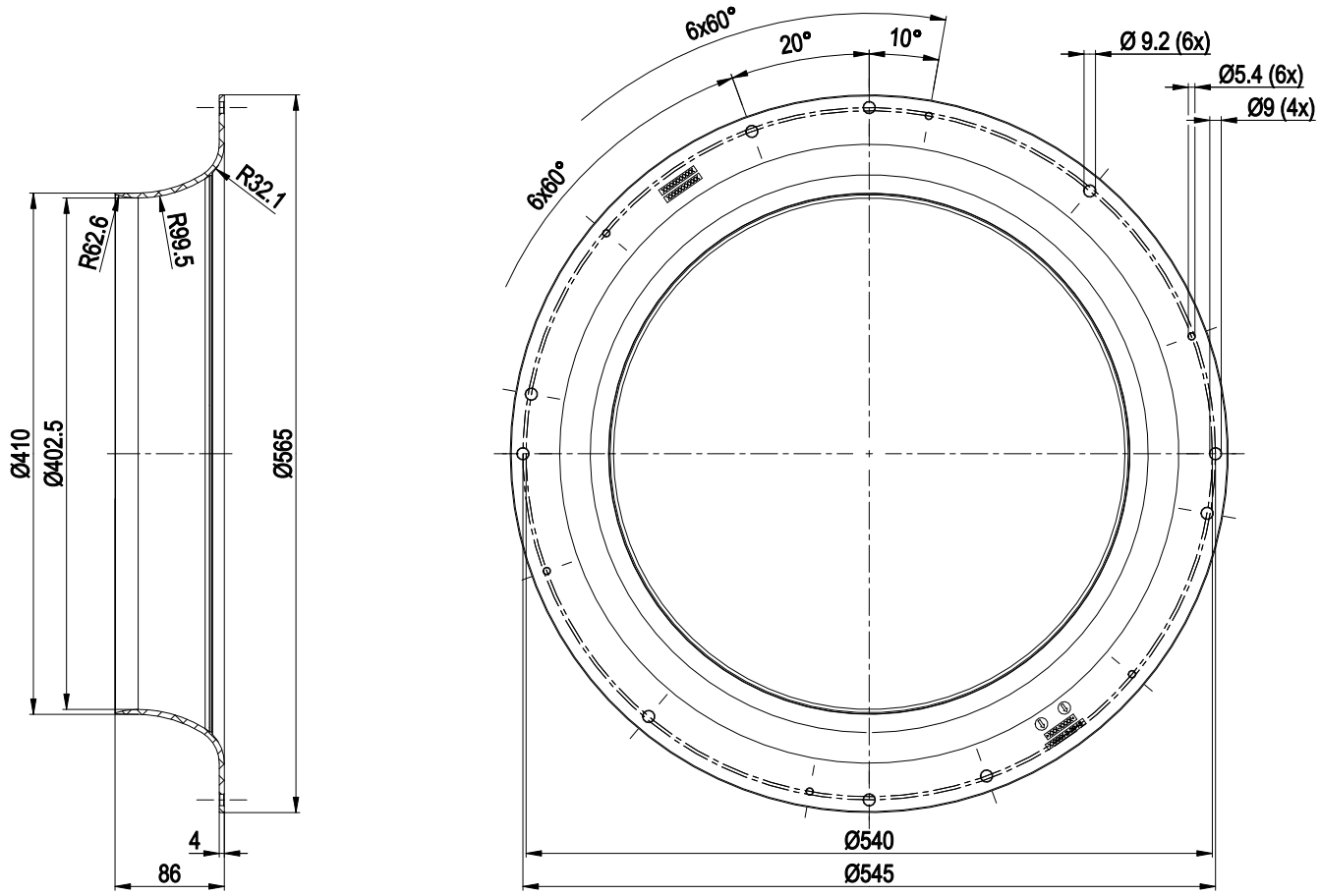

Inlet ring 56902-2-2943 ,tightening torque 5.5±0.8Nm for M5 screw

EC centrifugal fan - RadiCal

backward-curved, single-intake

Connection diagram

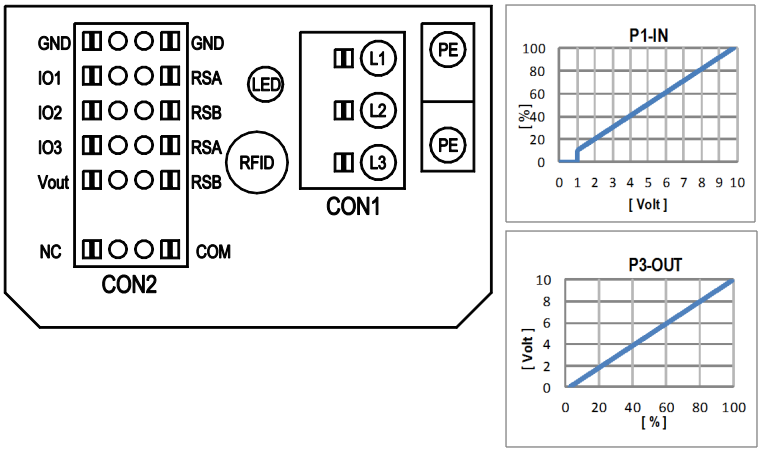

No.	Conn.	Designation	Function/assignment
	CON1	L1, L2, L3	Power supply, phase, see nameplate for voltage range
	PE	PE	Protective earth
	CON2	RSA	RS485 interface for MODBUS, RSA; SELV
	CON2	RSB	RS485 interface for MODBUS, RSB; SELV
	CON2	GND	Reference ground for control interface, SELV
	CON2	IO1	Function parameterizable (see “Optional interface functions” table) Factory setting: Digital input - high active, function: Disable input, SELV - inactive: Pin open or applied voltage < 1.5 VDC - active: applied voltage 3.5-50 VDC Reset function: Triggering of error reset on change of state from "enabled" to "disabled"
	CON2	IO2	Function parameterizable (see “Optional interface functions” table) Factory setting: Analog input 0-10 V / PWM, Ri=100 kΩ, function: Set value Characteristic curve parameterizable (see input characteristic curve P1-IN), SELV
	CON2	IO3	Function parameterizable (see “Optional interface functions” table) Factory setting: Analog output 0-10 V, max. 5 mA, function: Fan modulation level Characteristic curve parameterizable (see output characteristic curve P3-OUT), SELV
	CON2	Vout	Voltage output 3.3-24 VDC ±5%, Pmax=800 mW, voltage parameterizable Factory setting: 10 VDC short-circuit-proof, supply for external devices, SELV alternatively: 15-50 VDC input for parameterization via MODBUS without line voltage
	CON2	COM	Status relay, floating status contact, common connection, contact rating 250 VAC / 2 A (AC1) / min. 10 mA, reinforced insulation on supply side and on control interface side
	CON2	NC	Status relay, floating status contact, break for failure
		LED	green: status = good, ready for operation orange: status = warning red: status = failure
		P1-IN	Input characteristic curve
		P3-OUT	Output characteristic curve

EC centrifugal fan - RadiCal

backward-curved, single-intake

Terminal/plug assignment

CON2	configurable IO mode	electrical specification	MODBUS Register for IO mode configuration	configurable IO functions: normal / inverse	INPUT: source: set value	INPUT: source: sensor value	INPUT: switch: parameter set: #1 / #2	INPUT: switch: control function: heating (pos.) / cooling (neg.)	INPUT: switch: direction of rotation: cw / ccw	INPUT: switch: set value source	INPUT: switch: fan enable / disable	OUTPUT: signal: tach out (selected directly via IO mode)	OUTPUT: signal: diagnostics out (selected directly via IO mode)	OUTPUT: signal: fan modulation level % D130 [0]	OUTPUT: signal: actual speed D130 [1]	OUTPUT: signal: system modulation level % D130 [2]	OUTPUT: signal: remote control output 0-10V D130 [5]	OUTPUT: pulse input for auto-adressing D00C [1]	OUTPUT: pulse output for auto-adressing D130 [4]
IO1	○ **Din1 (active high)**: digital input	not active: pin open or applied voltage < 1,5VDC active: applied voltage 3,5-50VDC, SELV	D158 [0]		○		○	○	○	○	○			○	○	○	○		
	○ **Ain1 0-10V/PWM**: analog input	Ri=100K, characteristic curve parameterizable, f_{PWM}=1k..10KHz, SELV	D158 [2]		○														
	○ **Tach out** (open collector output)	Umax=50VDC, Imax=20mA SELV	D158 [5]									○							
	○ **Diagnostics out** (open collector output)	Umax=50VDC, Imax=20mA SELV	D158 [6]										○						
IO2	○ **Din2 (active high)**: digital input	not active: pin open or applied voltage < 1,5VDC active: applied voltage 3,5-50VDC, SELV	D159 [0]				○	○	○	○	○								
	○ **Ain2 0-10V/PWM**: analog input	Ri=100K, characteristic curve parameterizable, fPWM=1k..10KHz, SELV	D159 [2]			○													
	○ **Ain2 4-20mA**: analog input	Ri=125R, characteristic curve parameterizable, SELV	D159 [3]																
IO3	○ **Din3 (active high)**: digital input	not active: pin open or applied voltage < 1,5VDC active: applied voltage 3,5-50VDC, SELV	D15A [0]					○	○	○	○								
	○ **Din3 (active low)**: digital input	active: pin open or applied voltage 3,5-50VDC not active: applied voltage < 1,5VDC, SELV	D15A [1]																
	○ **PWMin3**: digital input	40Hz - 10kHz, characteristics parameterizable not active: pin open or applied voltage 3,5-50VDC active: applied voltage < 1,5VDC, SELV	D15A [7]			○													
	○ **Aout3 0-10V**: analog output	function parameterizable, max. 5mA, max output frequency 300Hz, SELV	D15A [4]											○	○	○	○		
	○ **Tacho out** (pulses), analog output	0-10V max. 5mA, max output frequency 300Hz, SELV	D15A [5]									○							
	○ **Diagnostics out** (pulses)	0-10V max. 5mA, max output frequency 300Hz, SELV	D15A [6]										○						
RSA RSB	RS485 bus connection,	MODBUS RTU, specification V6.0, SELV			○		○	○	○	○	○								
Vout	voltage output	voltage parameterizable 3,3...24VDC +/- 5,5%, Pmax=800mW, short-circuit-proof, supply for external devices, SELV	D16E [...]																
	alternatively: Input auxiliary power supply for parameter-ization via RS485/MODBUS RTU without line voltage	15...50VDC																	

○ configurable option

For further information and additional functions see EC Control Software, Fan-Set-App, or MODBUS Parameter Specification V6.0

R3G560-8317081579
8317081579

EC centrifugal fan - RadiCal

backward-curved, single-intake

Curves: Air performance 50 Hz

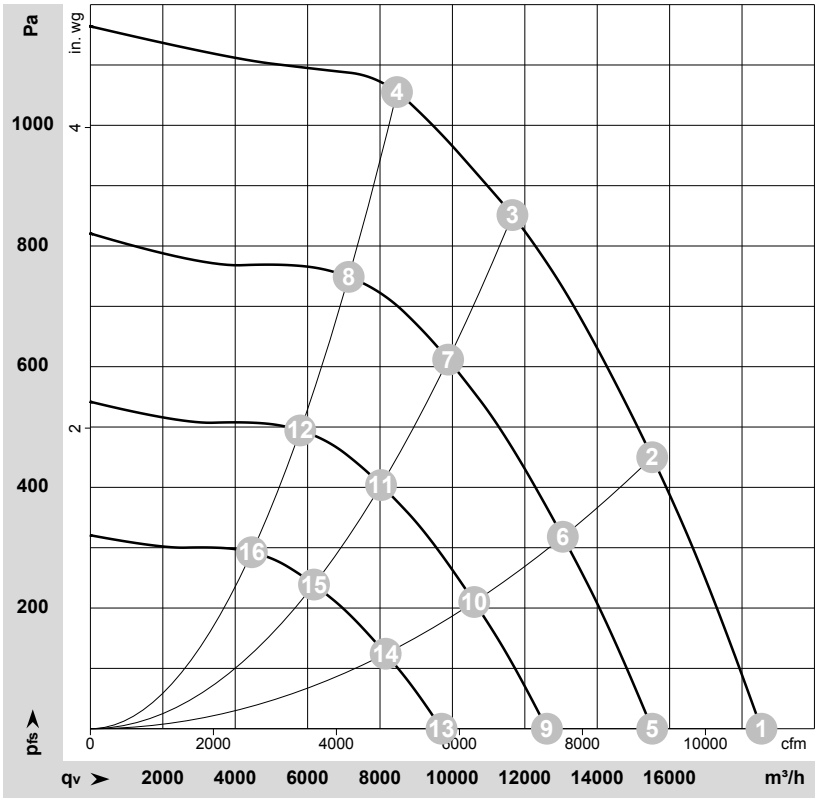

ρ = 1.15 kg/m³ ± 2 %

Measurement:13384

Air performance measured according to ISO 5801 installation category A. For detailed information on the measurement setup, contact ebm-papst. Intake sound level: Sound power level according to ISO 13347 / sound pressure level measured at 1 m distance from fan axis. The values given are valid under the specified measuring conditions and may vary due to conditions of installation. For deviations from the standard configuration, the parameters have to be checked on the installed unit.

Fan performance

	Wired	U	f	n	P_{ed}	I	LpA_{in}	LwA_{in}	LwA_{out}	q_V	p_{fs}	q_V	p_{fs}
		V	Hz	min^{-1}	W	A	dB(A)	dB(A)	dB(A)	m^3/h	Pa	cfm	in. wg
1	3~	400	50	1900	2299	3.57	91	97	101	18535	0	10910	0.00
2	3~	400	50	1900	3480	5.32	88	92	96	15520	450	9135	1.81
3	3~	400	50	1900	3950	6.00	72	80	86	11660	850	6860	3.41
4	3~	400	50	1900	3950	6.00	77	84	89	8470	1050	4985	4.22
5	3~	400	50	1600	1349	2.10	86	92	96	15520	0	9135	0.00
6	3~	400	50	1600	2065	3.16	84	87	92	13050	320	7680	1.28
7	3~	400	50	1600	2404	3.67	68	75	82	9880	612	5815	2.46
8	3~	400	50	1600	2359	3.60	73	80	84	7135	749	4200	3.01
9	3~	400	50	1300	724	1.12	81	87	91	12610	0	7420	0.00
10	3~	400	50	1300	1108	1.69	78	82	86	10605	212	6240	0.85
11	3~	400	50	1300	1289	1.97	63	70	76	8030	404	4725	1.62
12	3~	400	50	1300	1265	1.93	68	74	79	5795	495	3410	1.99
13	3~	400	50	1000	329	0.51	74	80	85	9700	0	5710	0.00
14	3~	400	50	1000	504	0.77	72	75	80	8155	125	4800	0.50
15	3~	400	50	1000	587	0.90	56	64	70	6175	239	3635	0.96
16	3~	400	50	1000	576	0.88	61	68	73	4460	293	2625	1.18

Wired = Wiring · U = Voltage · f = Frequency · n = Speed (rpm) · P_{ed} = Power consumption · I = Current draw · LpA_{in} = Sound pressure level intake side · LwA_{in} = Sound power level intake side LwA_{out} = Sound power level outlet side · q_V = Air flow · p_{fs} = Pressure increase