R2E280-AE52-05

AC centrifugal fan

backward curved, single inlet



ebm-papst Mulfingen GmbH & Co. KG
Bachmühle 2
74673 Mulfingen
Phone: +49 7938 81-0
Fax: +49 7938 81-110
www.ebmpapst.com
info1@de.ebmpapst.com

Nominal data

Type	**R2E280-AE52-05**
Motor	**M2E068-EC**

Phase		1~
Nominal voltage	[V]	230
Frequency	[Hz]	50
Type of data definition		rfa
Valid for approval / standard		CE
Speed	[min^{-1}]	2700
Power input	[W]	225
Current draw	[A]	1.0
Motor capacitor	[µF]	7
Capacitor voltage	[VDB]	400
Capacitor standard		P0 (CE)
Min. back pressure	[Pa]	0
Max. ambient temperature	[°C]	40

ml = max. load · me = max. efficiency · rfa = running at free air · cs = customer specs · cu = customer unit
Subject to alterations

AC centrifugal fan

backward curved, single inlet

Technical features

Leackage current	< 0,75 mA
Size	280 mm
Operation mode	Continuous operation (S1)
Direction of rotation	Clockwise, seen on rotor
Humidity class	F1-2
Insulation class	"F"
Cable exit	Variable
Bearing motor	Ball bearing
Mass	3.0 kg
Material of electronics housing	Rotor: Coated in black
Material of impeller	Sheet steel, coated in black
Motor protection	Thermal overload protector (TOP) wired internally
Product conforming to standard	CE
Number of blades	11
Type of protection	IP 44
Protection class	I
Approval	CCC; GOST

ebm-papst Mulfingen GmbH & Co. KG · Bachmühle 2 · 74673 Mulfingen · Phone: +49 7938 81-0 · Fax: +49 7938 81-110 · www.ebmpapst.com · info1@de.ebmpapst.com

AC centrifugal fan

backward curved, single inlet

Product drawing

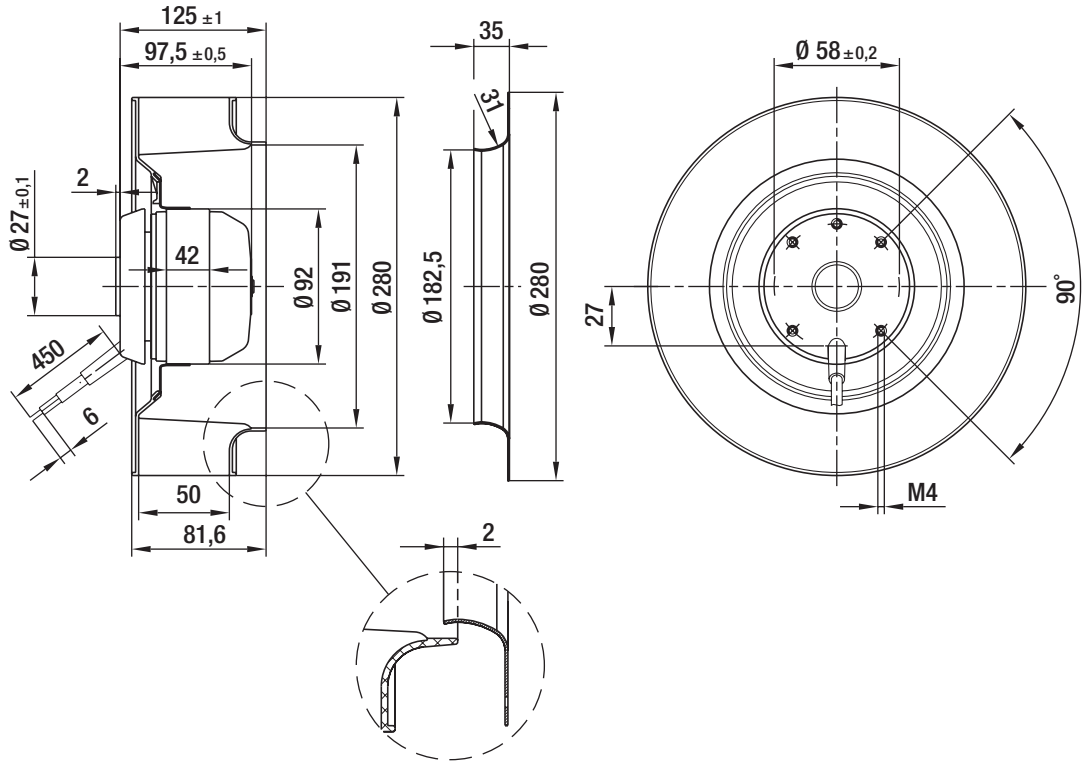

ebm-papst Mulfingen GmbH & Co. KG · Bachmühle 2 · 74673 Mulfingen · Phone: +49 7938 81-0 · Fax: +49 7938 81-110 · www.ebmpapst.com · info1@de.ebmpapst.com

AC centrifugal fan

backward curved, single inlet

Connection screen

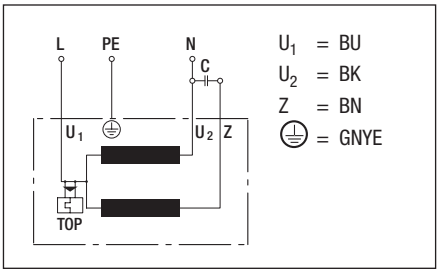

ebm-papst Mulfingen GmbH & Co. KG · Bachmühle 2 · 74673 Mulfingen · Phone: +49 7938 81-0 · Fax: +49 7938 81-110 · www.ebmpapst.com · info1@de.ebmpapst.com

AC centrifugal fan

backward curved, single inlet

Charts: Air flow 50 Hz

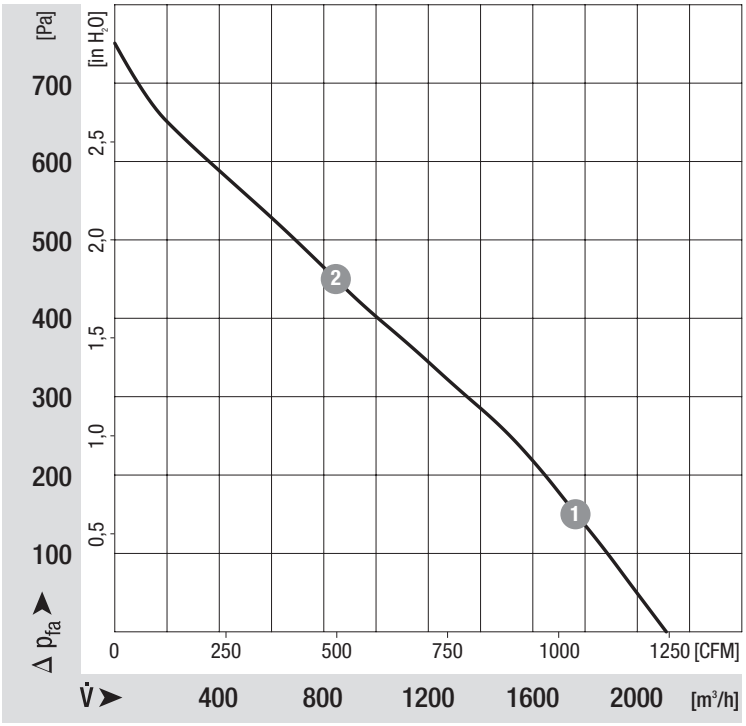

Measured values

	n	P_1	I
	[min-1]	[W]	[A]
1	2560	265	1.18
2	2390	312	1.38

ebm-papst Mulfingen GmbH & Co. KG · Bachmühle 2 · 74673 Mulfingen · Phone: +49 7938 81-0 · Fax: +49 7938 81-110 · www.ebmpapst.com · info1@de.ebmpapst.com