R2E220-AB06-05

AC centrifugal fan

backward curved, single inlet



ebm-papst Mulfingen GmbH & Co. KG
Bachmühle 2
74673 Mulfingen
Phone: +49 7938 81-0
Fax: +49 7938 81-110
www.ebmpapst.com
info1@de.ebmpapst.com

Nominal data

Type	**R2E220-AB06-05**
Motor	**M2E068-CF**

Phase		1~	1~
Nominal voltage	[V]	230	230
Frequency	[Hz]	50	60
Type of data definition		rfa	rfa
Valid for approval / standard		CE	CE
Speed	[min^{-1}]	2700	3050
Power input	[W]	85	115
Current draw	[A]	0.38	0.51
Motor capacitor	[µF]	2.5	2.5
Capacitor voltage	[VDB]	400	400
Min. back pressure	[Pa]	0	0
Max. ambient temperature	[°C]	45	45

ml = max. load · me = max. efficiency · rfa = running at free air · cs = customer specs · cu = customer unit
Subject to alterations

AC centrifugal fan

backward curved, single inlet

Technical features

Leackage current	< 0.75 mA
Size	220 mm
Operation mode	S1
Direction of rotation	Clockwise, seen on rotor
Mounting position	Shaft horizontal or rotor on bottom; rotor on top on request
Humidity class	F1-2
Insulation class	"B"
Cable exit	Variable
Condensate discharge holes	Rotor-side
Bearing motor	Ball bearing
Mass	1.75 kg
Material of impeller	PA plastic 6, fibreglass-reinforced
Motor protection	Thermal overload protector (TOP) wired internally
Product conforming to standard	CE; EN 60335-1
Surface of rotor	Coated in black
Number of blades	11
Type of protection	IP 44; Depending on installation and position as per EN 60034-5
Protection class	I
Max. permissible ambient motor temp. (transp./ storage)	+ 80 °C
Min. permissible ambient motor temp. (transp./storage)	- 40 °C
Approval	CCC; GOST

ebm-papst Mulfingen GmbH & Co. KG · Bachmühle 2 · 74673 Mulfingen · Phone: +49 7938 81-0 · Fax: +49 7938 81-110 · www.ebmpapst.com · info1@de.ebmpapst.com

AC centrifugal fan

backward curved, single inlet

Product drawing

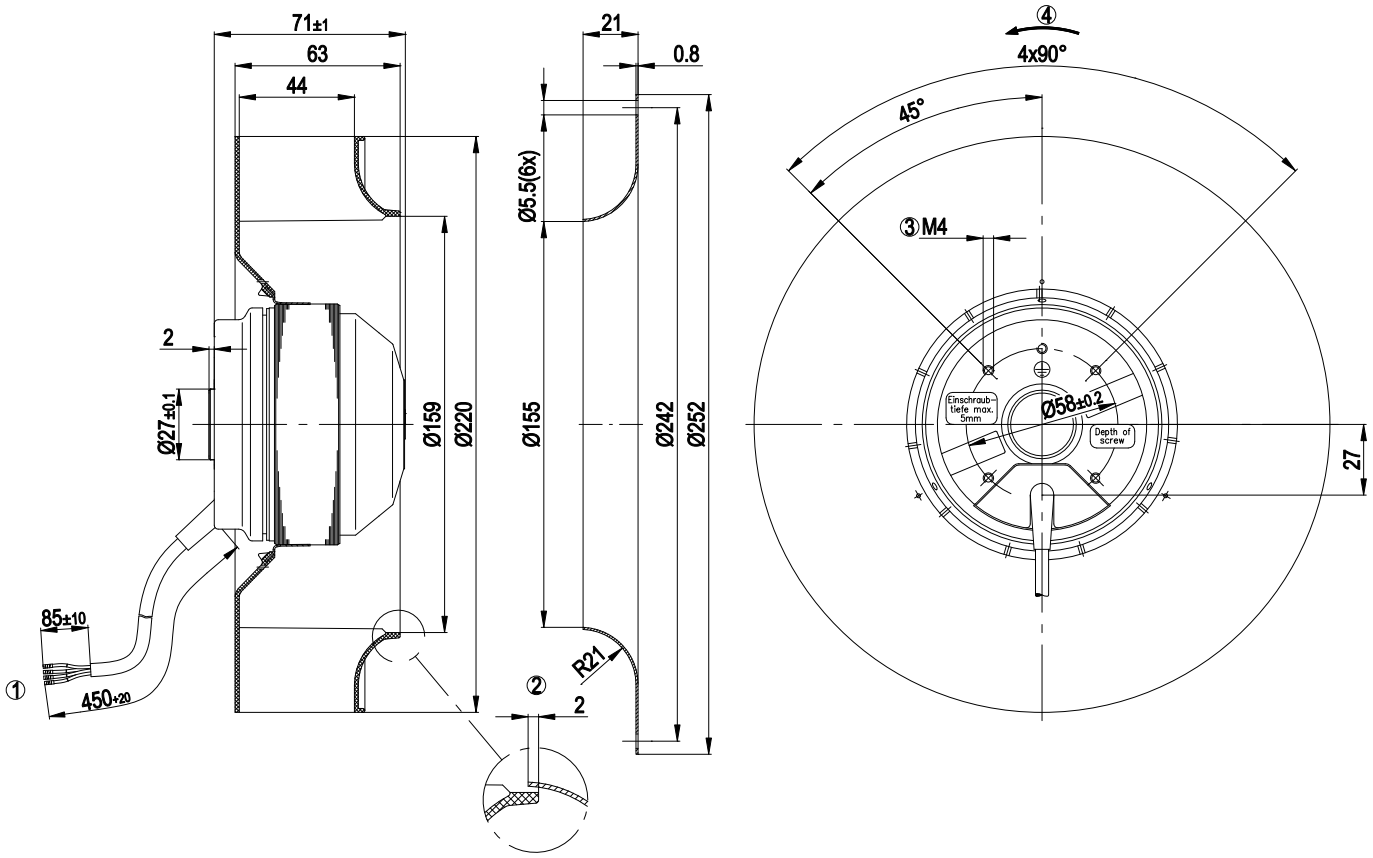

1	Connection line PVC, 4x brass lead tips crimped
2	Accessory part: Inlet nozzle 09609-2-4013, not included in the standard scope of delivery
3	Screw depth max. 5 mm
4	Direction of rotation clockwise, seen on rotor

ebm-papst Mulfingen GmbH & Co. KG · Bachmühle 2 · 74673 Mulfingen · Phone: +49 7938 81-0 · Fax: +49 7938 81-110 · www.ebmpapst.com · info1@de.ebmpapst.com

AC centrifugal fan

backward curved, single inlet

Connection screen

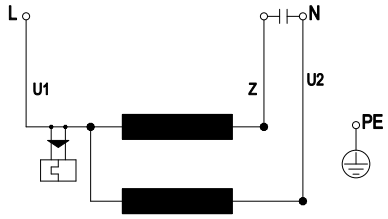

U1	blue	Z	brown	U2	black
PE	green/yellow				

ebm-papst Mulfingen GmbH & Co. KG · Bachmühle 2 · 74673 Mulfingen · Phone: +49 7938 81-0 · Fax: +49 7938 81-110 · www.ebmpapst.com · info1@de.ebmpapst.com

AC centrifugal fan

backward curved, single inlet

Charts: Air flow 50 Hz

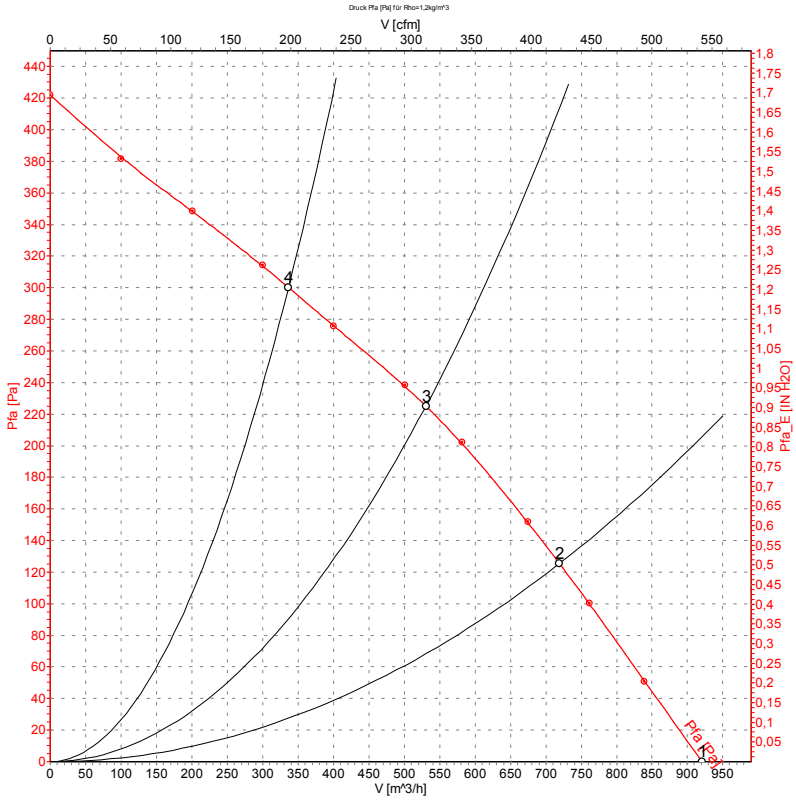

Measurement: LU-106769

Measured values

	U	f	n	P_1	I	LpA_{ss}	$\dot{V}$	p_{fa}
	[V]	[Hz]	[min^{-1}]	[W]	[A]	[dB(A)]	[m^3/h]	[Pa]
1	230	50	2665	85	0.38	72	920	0
2	230	50	2540	97	0.43		720	125
3	230	50	2475	104	0.46		530	225
4	230	50	2495	102	0.45		335	300

ebm-papst Mulfingen GmbH & Co. KG · Bachmühle 2 · 74673 Mulfingen · Phone: +49 7938 81-0 · Fax: +49 7938 81-110 · www.ebmpapst.com · info1@de.ebmpapst.com

AC centrifugal fan

backward curved, single inlet

Charts: Air flow 60 Hz

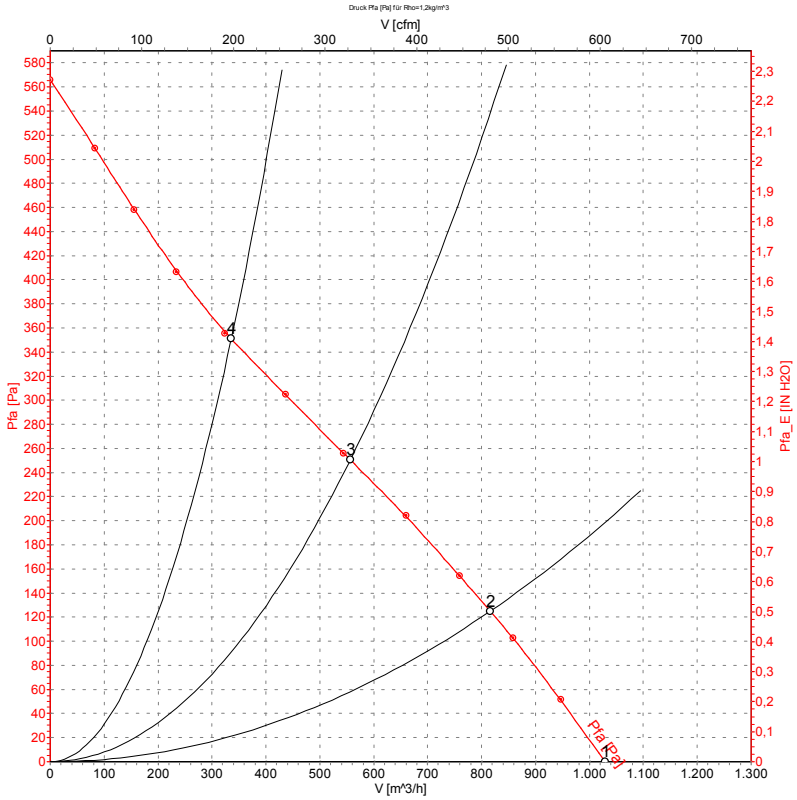

Measurement: LU-106770

Measured values

	U	f	n	P_1	I	LpA_{ss}	$\dot{V}$	p_{fa}
	[V]	[Hz]	[min^{-1}]	[W]	[A]	[dB(A)]	[m^3/h]	[Pa]
1	230	60	2985	115	0.51	75	1030	0
2	230	60	2770	128	0.55		815	125
3	230	60	2600	138	0.60		555	250
4	230	60	2680	133	0.58		335	350

ebm-papst Mulfingen GmbH & Co. KG · Bachmühle 2 · 74673 Mulfingen · Phone: +49 7938 81-0 · Fax: +49 7938 81-110 · www.ebmpapst.com · info1@de.ebmpapst.com