SPECIFICATION

MODEL
K-EC225-R230-29Y

1.General Specification

NO.	Item	Specification	Condition
1	Model No.	K-EC225-R230-29Y	
2	Outline Dimension	225mm	
3	Rated Voltage	230VAC	
4	Rated Current	1.1A±10%	At Rated Voltage, 25℃, 65% RH, Free Air
5	Power Consumption	170W±10%	
6	Rotating Speed±10%	2900RPM±10%	
7	Max Airflow±10%	1319m³/h	At Rated Voltage AMCA-210-99 Standard
8	Max Static Pressure±10%	930Pa	
9	Noise Level	70dB(A)	
10	Operation mode	S1 continuous working system	
11	No. of Pole	2 Poles	
12	Rotating Direction	From the rotor end, rotate clockwise	
13	Structure type	Outer Rotor	
14	Motor Type	DC Brushless	
15	Balance	G6.3	
16	Life L_{10} at 25℃	Greater than 25000/hrs（Ordinary Humidity）	
17	Insulation	Class B	
18	Weight	1.5kg	

2.Main Materials/Parts Specification

Materials/Parts		Specification
1	Housing	/
2	Impeller	PA6+GF
3	Bearing	NMB/NSK 608 Z
4	Connector	N/A

3.Electrical Specification

Item		Specification/Condition
1	Locked Rotor Protection	1.Auto power off after locked at rated voltage for 1 sec.
		2.After auto power off, circuit attempt to restart in 2-6 sec.
2	Polarity Protection	Open circuit when Vcc& GND are exchanged.
		Circuit won't be burned within 5 seconds when Vcc& GND are exchanged.
3	Insulation Resistance	10MΩ/Between unshielded wire and frame at 1500VAC/min.
4	Dielectric Strength	5 mA Max./Measured between lead wire(+) and frame at 1500 VAC/min.

4.Environmental Specification

Item		Specification/Condition
1	Operating Temp. Range	-25℃~+60℃ (Normal humidity)
2	Storage Temp. Range	-25℃~+60℃ (Normal humidity)

5.Noise Measure Condition

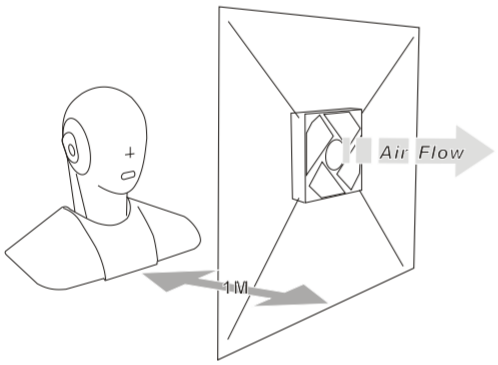

Measurement Systems
1.ANECHOIC Room Noise Measurement System.
2.Digital Head Measurement System, 16-bits version.
3.SQlab III, Mobile Multichannel Analysis System.
4.Specifications:ISO 3744, ISO 3745, ISO 7779, CNS 6753, JIS 8346
5.Background Noise: < 17dB(A)

6.Outline Dimension（Unit:mm）

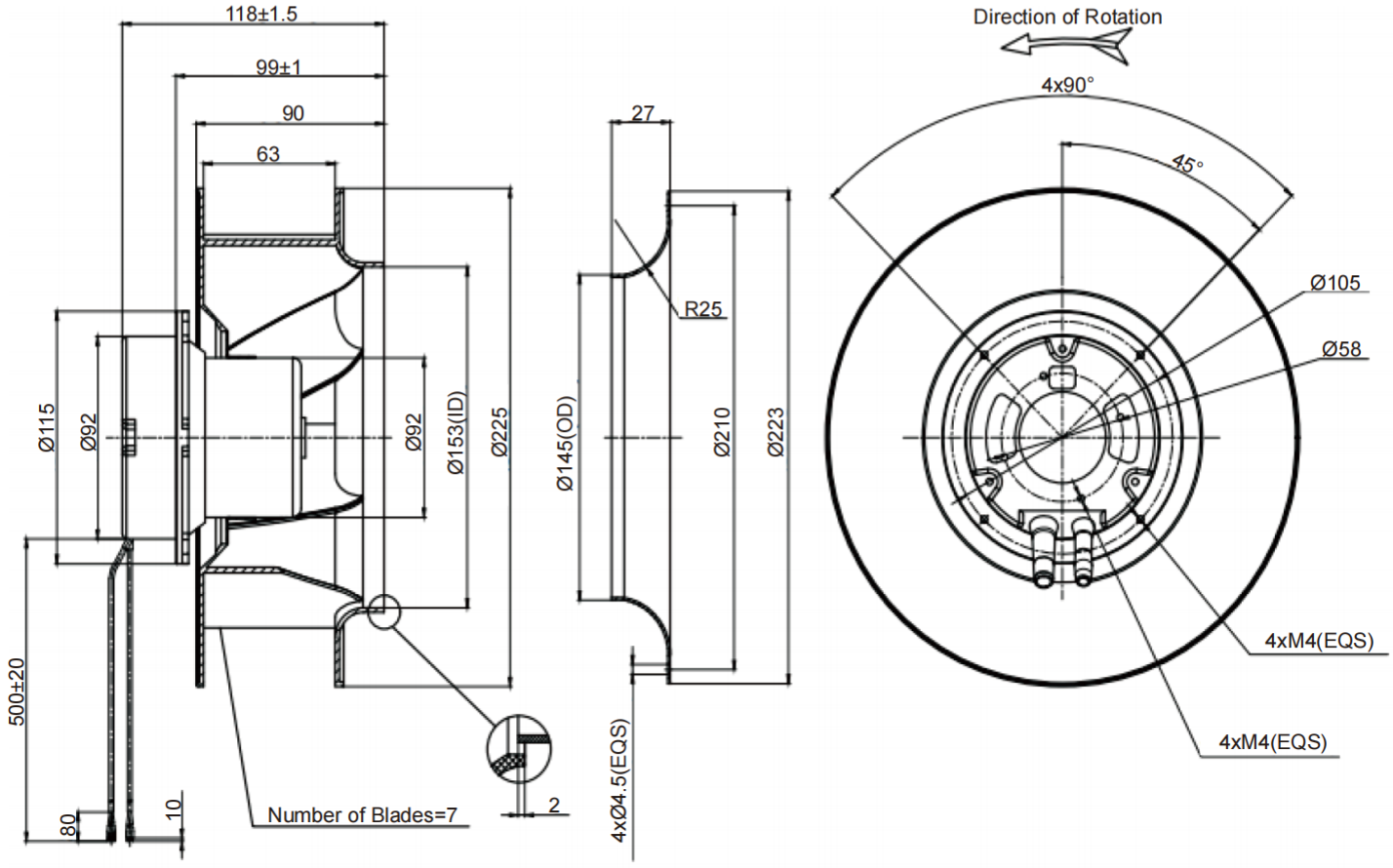

7.Airflow Performance

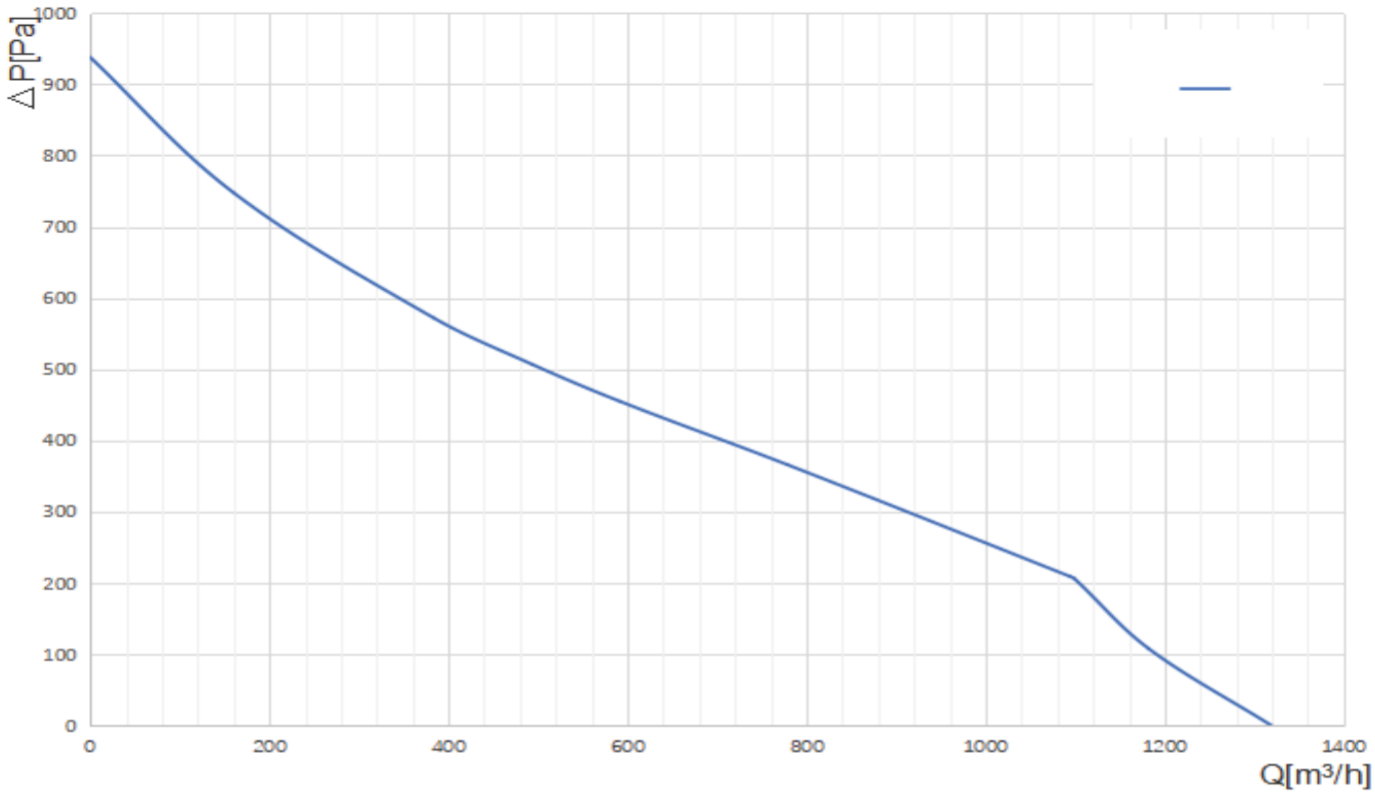

8.Connection

External lead wiring diagram							
Colour	Blue	Brown	Yellow/Green	Red	Blue	Yellow	White
Function	L	N	PE	+10VDC Output	GND	0~10VDC PWM	FG

Speed control (0-10VDC) circuit diagram

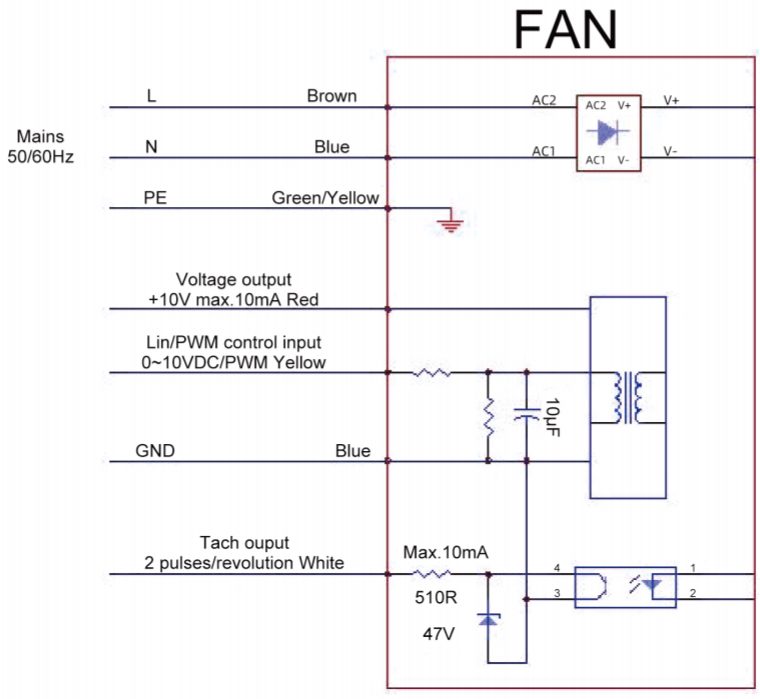

9.Notes

9-1.Please do not touch and push Fan Blade with fingers or others, fan blade and bearings may be damaged and it causes noise defect.
9-2.Do not carry the fan by its lead wires.
9-3.Please don't install this fan in series with 2x voltage inputs. For example, if a single fan rated at 115VAC (12VDC), then don't install two of them in series with 230VAC (24VDC) input.
9-4.Fans are not suitable to be used in an environment that contains aggressive or corrosive fluids.
9-5.Always ensure that fan is stored according to the storage temperatures specified. Do not store in an environment with a high humidity level. If the fans were stored for longer than 6 months,it is highly recommended to apply functional testing before shipping.
9-6.During installation, caution should be taken when mounting the fan. Incorrect mounting can cause excess resonance, vibration and noise.
9-7.During testing it is important to consider safety at all times. A suitable guard should be fitted to the fan to prevent personal injury.
9-8.Unless otherwise stated, all tests are carried out at relative temperature and humidity conditions of 25℃, 65%RH.