SPECIFICATION

MODEL
K-EC190-R230-44

1.Technical Data

Item	Specifications
Phase	1~
Rated Voltage	230VAC
Voltage Range	184~270VAC
Frequency	50/60Hz
Current Draw	0.85A±10%
Power Consumption	135W±10%
Speed	4400min^{-1}±5%
Max.Air Flow	479.04CFM/814m^3/h
Max.Static Pressure	3.51In.wg/878Pa
Sound Pressure Level	80dB(A)±5%
Insulation Level	Class B
Protection Grade	IP44
Control Input	0~10VDC/PWM
Signal Output	FG(Tach output)

2.Electrical Characteristics

Item	Specifications	
Voltage Output	Output +10VDC, max. 1.1 mA (Can be used as speed control input voltage or FG signal pull-up voltage， and need to be circumscribed in series with a pull -up resister)	
Dielectric Resistance	10mA maximum at 1800VAC 50Hz one second between frame and (+) terminal	
Life Expectance	50,000 Hours(L10),at 40℃ room,humidity 15%~65%RH	
Leakage Current	Fan is tested at 270VAC for 3 seconds with leakage current ≤3.5mA(Max.)	
Direction of Air Flow	All around,Straight forward from air outlet	
Motor	External rotor EC motor	
Storage Temperature	-40℃~+75℃	
Operating Humidity	5%~90%RH	
Storage Humidity	5%~95%RH	
Technical Features	Motor current limitation	
	Soft starting protection	
	Under/over voltage detection	
	Thermal overload protection for electronics/motor	
	Line undervoltage detection	
	Locked-rotor protection	
	Reverse polarity protection	
Operating Temperature	Fan	-25℃(Min.)~+60℃(Max.)
	Heat sink of IC	115℃(Max.)
	Other electronic parts	85℃(Max.)
	Ball bering	80℃(Max.)
	Lead wire	120℃(Max.)

3.Mechanical Specification

Item	Specifications
Impeller Diameter	190mm
Rotor Diameter	72mm
Number of Blades	7
Impeller Material	Propylene with glass-fiber reinforced
Electronics Housing Material	Die-cast aluminum
Direction of Rotation	Clockwise,viewed toward rotor
Installation Position	Any direction
Operation Mode	S1 Continuous working system
Motor Bearing	Ball bearing
Surface of Rotor	Coated in black
Weight	1.25/0.1Kg(Fan/Inlet)

4.Performance Curve

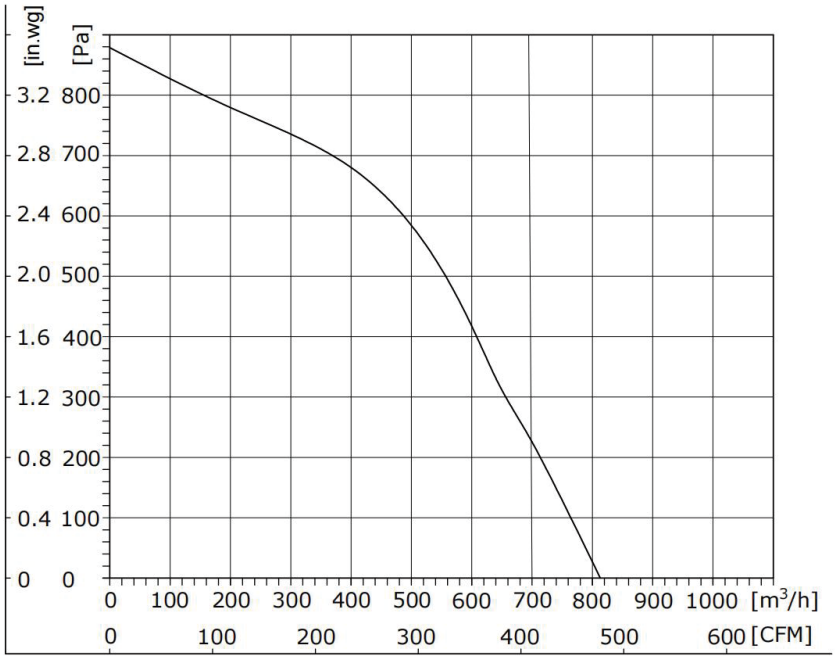

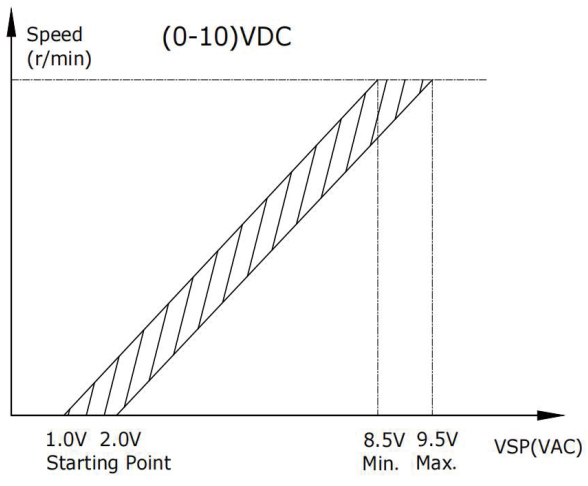

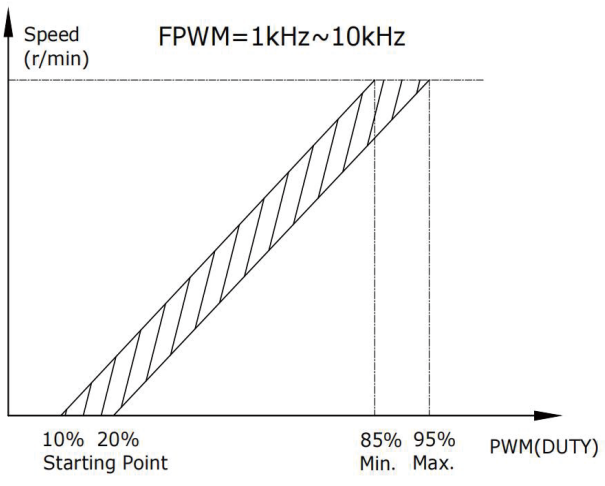

5.Wiring Diagram

Power Line	Signal	Colour	Function	AWG
Power Connection	L	Brown	Power supply 230VAC,mains 50/60Hz	#18AWG
	N	Blue	Power supply, neutral conductor,50/60 Hz	
	PE	Green/Yellow	Protective earth	
Control Connection	+10VDC	Red	Voltage output +10VDC max.1.1mA	#22AWG
	0~10VDC/PWM	Yellow	Control input 0~10VDC or PWM	
	FG	White	Tach output:2 puls per revolution	
	GND	Blue	GND connection of control interface	

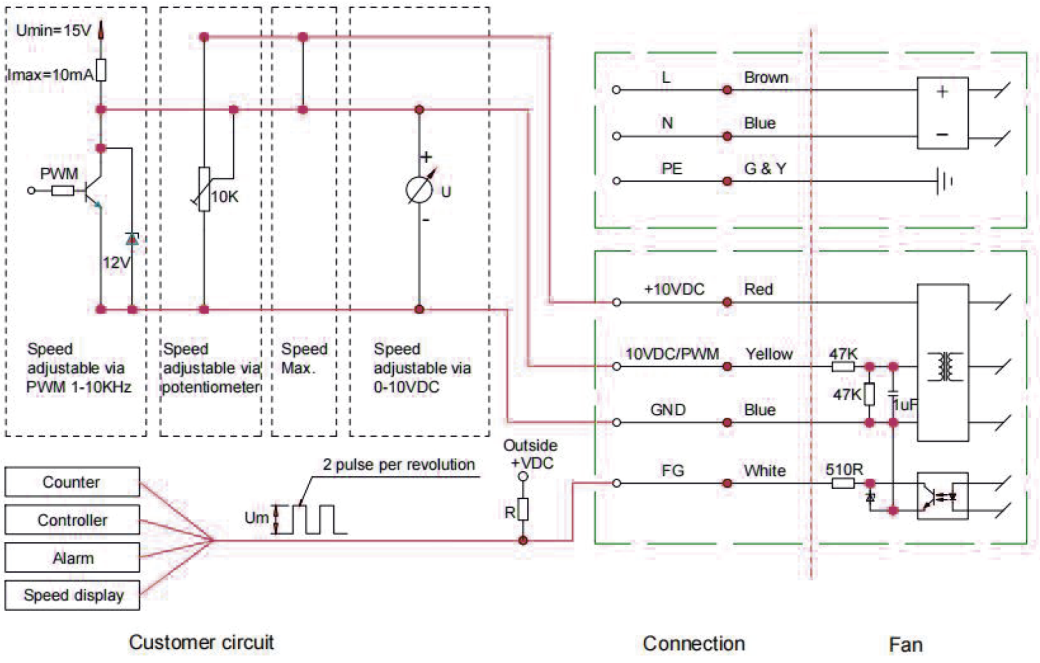

6.Outline Drawing

