EC Radial plug fan, Φ310mm
ECF(K)8D310-PLHDAL1-RF



Performance curve

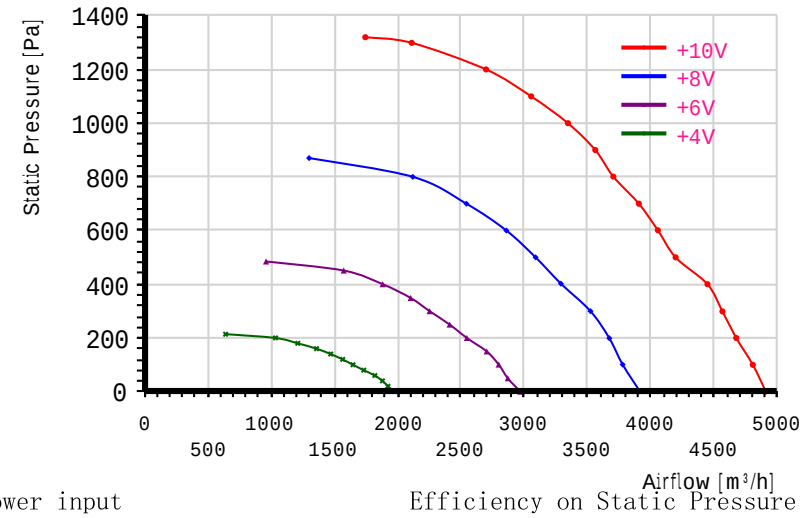

Power input

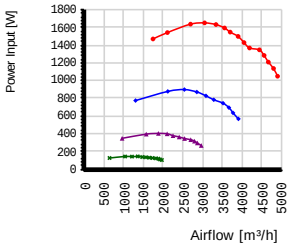

Efficiency on Static Pressure

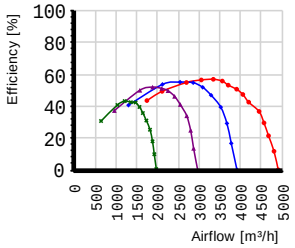

Product Features

☞Motor technology:EC
☞Supply voltage:3P,380~480V
☞Supply frequency:50/60 Hz
☞Rated voltage:400 VAC
☞Power input:1650 W
☞Current:2.8 A
☞Speed:3160 r/min
☞Perm.amb.temp:-25℃~+50℃
☞Inlet type:Single Inlet
☞Rotation:Counter-clockwise(Seen from cable exit)
☞Protection class:IP54
☞Insulation class:F
☞Impeller material:Sheet aluminium
☞Acoustic:82 dB(A)
☞Controller:Integrated,0~10V PWM
☞ErP level:2015
☞Housing:Without housing; With inlet ring; With bracket; With panel;

Wiring diagram

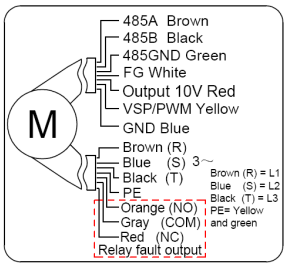

Dimensions mm

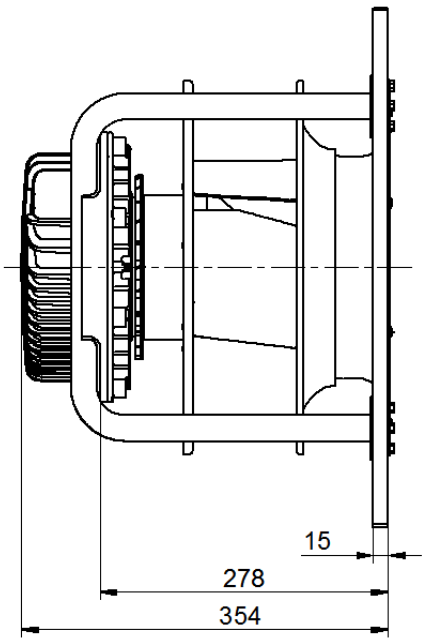

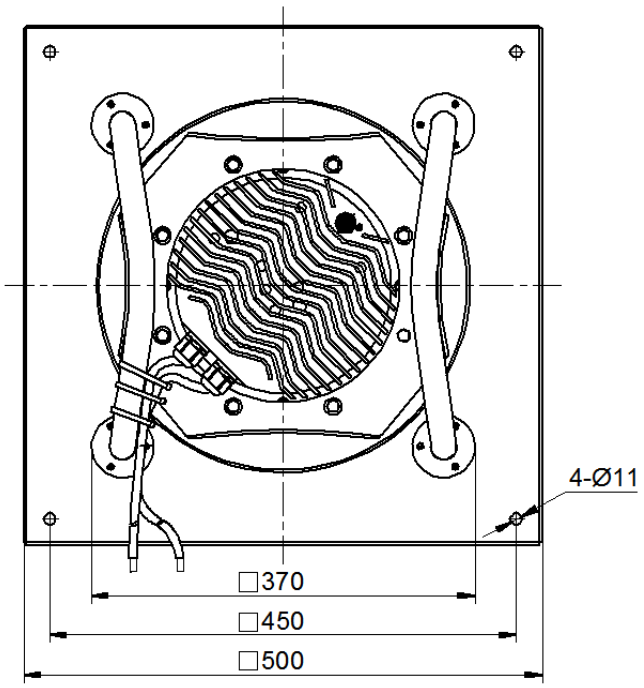

2023-12-11 14:29 Exported from MZFan Selector(V2.4.2.0) DB serialNo=45000