LANGDI

Specifications

Name: EC Backward Curved Centrifugal Fan

Model: EB280ST-A0-02

Version: A0

This specification mainly describes the mechanical properties, electrical properties, fan performance and product standards of EC backward centrifugal air.

Executive standards:
GB/T21418-2008 "Permanent magnet brushless motor system general technical conditions",
JB/T10563-2006 "General purpose centrifugal fan technical conditions

Edited by		
Reviewed by		
Approved by		

风机型号： EB280ST-A0-02

1. Technical data

1—1	Rated voltage	230VAC
1—2	Operating voltage	200～264 VAC
1—3	Rated speed	≤187VAC
1—4	Rated current	3000±5% RPM
1—5	Input power	4±0.5 A
1—6	Air volume max	625±10%W
1—7	Static pressure max	2950±10% M^3/H (A 型出风侧风室)
1—8	noise	1070±10%Pa (A 型出风侧风室)
1—9	life	≤82dB(A)
1—10	Impeller steering	25,000 hours (L10), At 40℃, the temperature of 15%~65%RH environment
1—11	Insulation class	Viewed from the rotor end, it is regarded as clockwise rotation
1—12	Withstand voltage	Class F
1—13	Protection function	Test voltage 1800VAC, maximum leakage current 10mA, lasting 1 second. Test location: test between live line or neutral line and motor housing.
1—14	Speedcontrol function	Locked-rotor protection Soft start protection Overcurrent protection Overvoltage protection High voltage constant power control
1—15	Minimum speed	Input 0~10VDC/PWM(input duty cycle and amplitude)
1—16	Class of protection	≤1.6 VDC
1—17	Insulation resistance	IP44
1—18	Feedback signal	Test power frequency voltage 500 V, 1S, resistance value ≥50MΩ. Test site: Test between all power leads and motor housing.
1—19	Vibration requirement	FG signal, output open circuit FG, there is no built-in pull-up resistor in the motor, the client needs an external pull-up resistor, and the rotor outputs 4 pulses per turn.
1—20	Voltage output	≤4.6mm/S
1—21	Rated voltage	+10VDC (Can be used as speed regulation voltage power supply and FG signal pull-up power supply)

风机型号：EB280ST-A0-02

2.Mechanical performance:

2—1	Overall dimension	Φ286mm X 205mm (见外形图)
2—2	Impeller material	Aluminium Alloy Plate
2—3	Leaf number	8
2—4	Impeller chassis	/
2—5	Impeller color	Original color of Aluminium Alloy Plate
2—6	Rotor surface	electrophoresis
2—7	Shaft bearing	ball bearing 6001ZZ
2—8	Power lead	AWG#18 AWG#22
2—9	Net weight	4.8Kg
2—10	Packing method	Sample: carton + shock-proof material. Order: Carton + shock-proof material + wooden pallet.

3. Electrical performance:

3—1	Locked-rotor protection	When the motor due to excessive load, foreign body stuck or artificial mechanical failure, resulting in the motor still output torque at zero speed, the electric control program will start power protection, about 2 ~ 5S after the motor will restart. If the stalling resistance continues to exist, the motor will repeat the above start-stop action; The motor will stop working after 3 stops in 2 minutes. It is necessary to remove abnormal resistance, and the motor will resume work after re-powering.
3—2	High voltage constant power control	Under a certain speed regulation voltage (0~10VDC), when the input voltage is greater than 230VAC, the fan speed will not increase with the increase of the input voltage, but maintain constant speed operation, which can prevent the instantaneous impact of the fan caused by power grid fluctuations, the protection function can extend the service life of the fan and maintain the stable operation of the fan.
3—3	Soft starting	Soft start, also known as slow start or anti-impulse current protection After the fan is powered on, the speed slowly rises from zero to the highest speed at the working point, which takes about 16 to 25 seconds. Avoid the motor from being damaged by the impact of high starting current.
3—4	Over current protection	Under the working voltage, the input current of the motor exceeds the maximum limit value, and the protection will be automatically cut off.
3—5	Over voltage protection	When the power supply voltage exceeds the maximum limit voltage, the motor will automatically power off protection.

4. Environment and test:

4—1	Operating ambient	-25℃ to 60℃
4—2	Storage ambient	-30℃ to 65℃
4—3	Ambient humidity	5% to 90% RH
4—4	Storage ambient humidity	5% to 95% RH
4—5	Drop test	In the single packaging state, the three faces of the packing box fall from 30cm high to 10mm thick wood, and the fan is not damaged.
4—6	Vibration test	Sinusoidal waveform: Displacement amplitude: 0.75mm(10G). Frequency: 10Hz to 55Hz / 30 seconds. 55Hz to 10Hz / 30 seconds. Cycle 120 times Duration: 2 hours Test direction: X,Y,Z.
4—7	Impact test	At peak acceleration of 50 g, continuous 11ms (half sine wave).
4—8	Dust proof test	Temperature range :15 ° C to 35 ° C. No metal body with a diameter of 1mm should pass between the rotor and the stator. Comply with IEC 60592 IP4X Note: This test is only applicable to the motor test, not suitable for the fan, the fan rotor after rotation, do not touch the rotor, there is a risk of personal injury.
4—9	Waterproofing test	Splashing water in all directions of the housing has no harmful effect. Complies with IEC 60529 IPX4
4—10	RoHS	All raw materials comply with RoHS requirements.

风机型号：EB280ST-A0-02

5,Curves

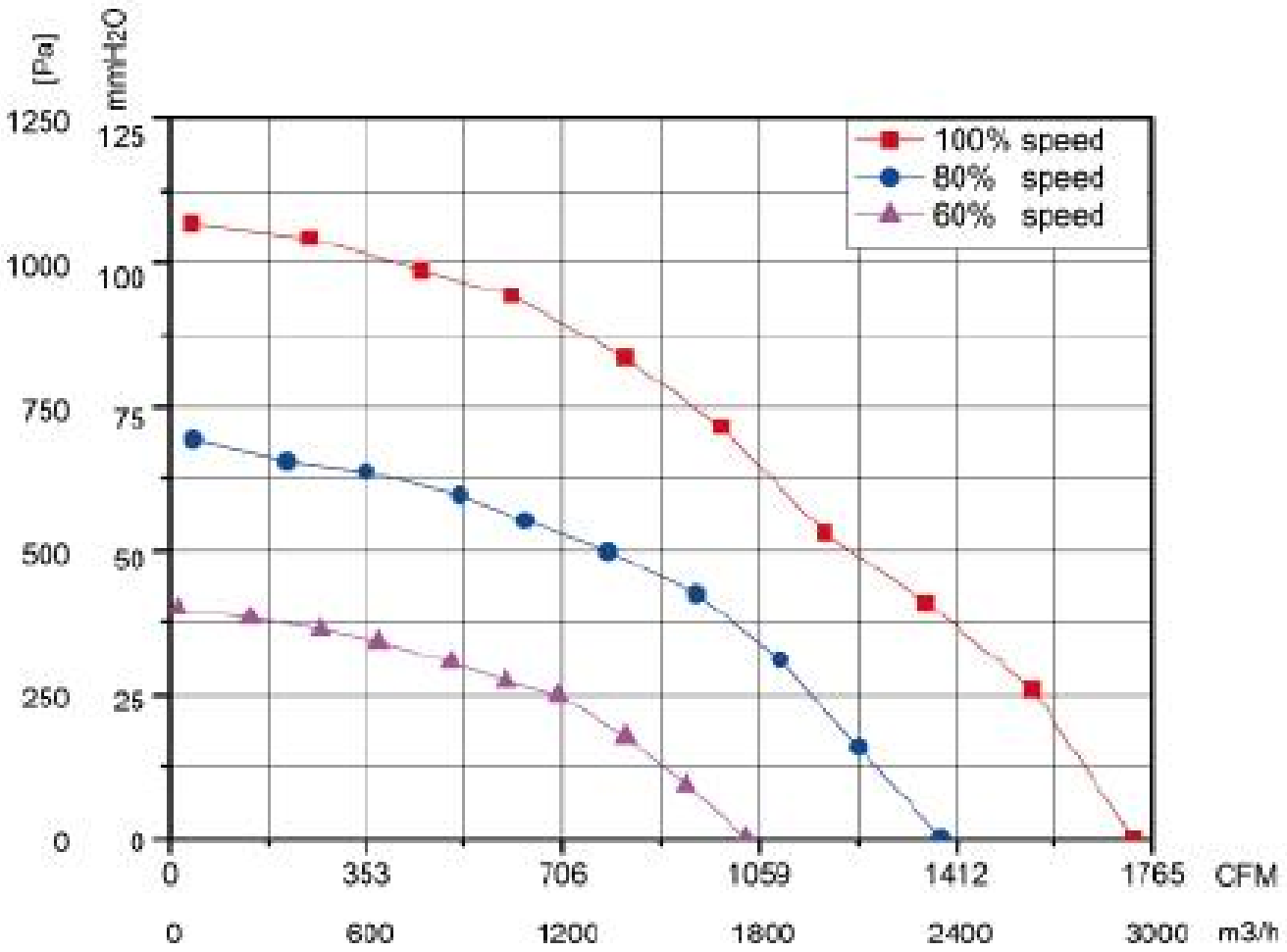

测试条件:

输入电压----额定电压(230VAC)

温　　度----室温

温　　度----65%RH

Test conditions:
Input voltage ---- Rated voltage (230VAC)
Temperature ---- room temperature
Temperature ----65%RH

风机型号：EB280ST-A0-02

6, Drawing:

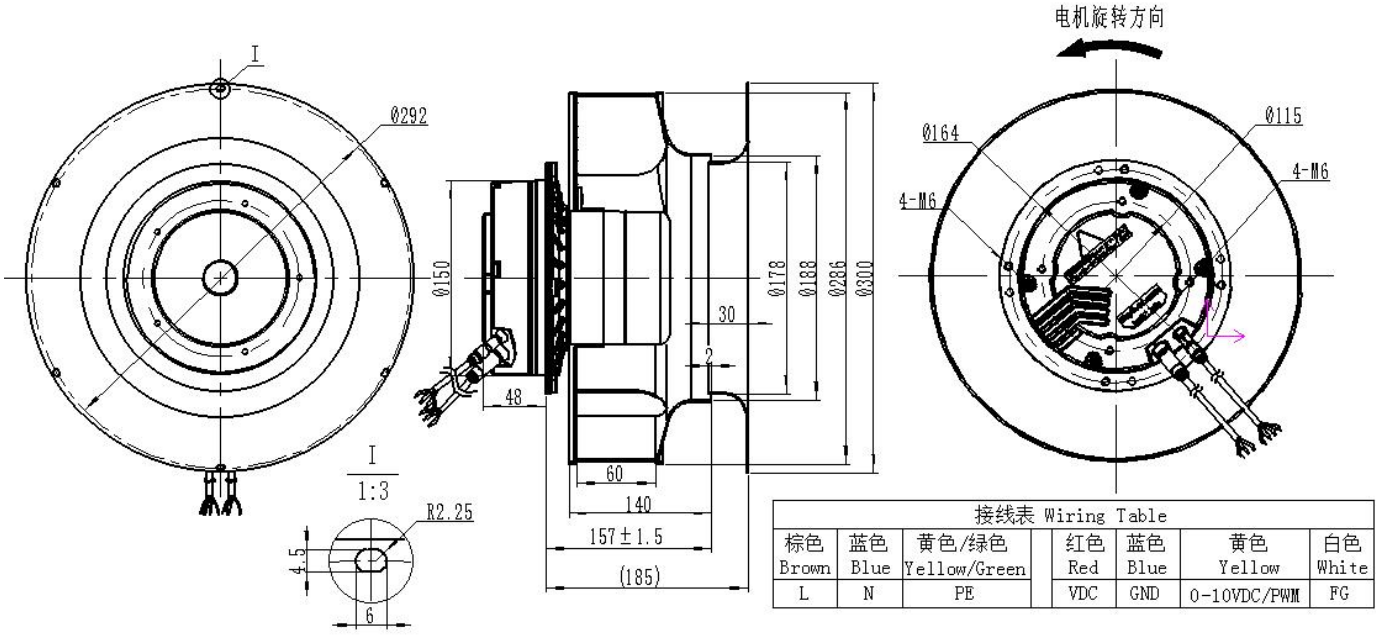

接线表 Wiring Table						
棕色 Brown	蓝色 Blue	黄色/绿色 Yellow/Green	红色 Red	蓝色 Blue	黄色 Yellow	白色 White
L	N	PE	VDC	GND	0-10VDC/PWM	FG

注:

1，电源引线：4X AWG22、3X AWG18;

红色线为+10VDC,黄色线为 0-10VDC/PWM(输入占空比和幅值)，白色线为 FG，蓝色线为 GND；

备注：VSP 与 PWM 调速不能同时实现，具体调速方式需在生产前确定好，我司默认调速方式为 VSP 调速;

棕色线为 L，蓝色线为 N，黄绿双色线为接地线;

2, 4XM6 螺钉；螺纹深度最大值 10mm;

3，配件:无.

Note:

1, power leads: 4X AWG22, 3X AWG18;

The red line is +10VDC, the yellow line is 0-10VDC/PWM(input duty cycle and amplitude), the white line is FG, and the blue line is GND.

Note: VSP and PWM speed regulation cannot be realized at the same time, the specific speed regulation mode needs to be determined before production, our default speed regulation mode is VSP speed regulation;

The brown line is L, the blue line is N, and the yellow-green two-color line is the ground line.

2, 4XM6 screws; Maximum thread depth 6mm;

3, accessories: None.

风机型号：EB280ST-A0-02

7, Wiring diagram:

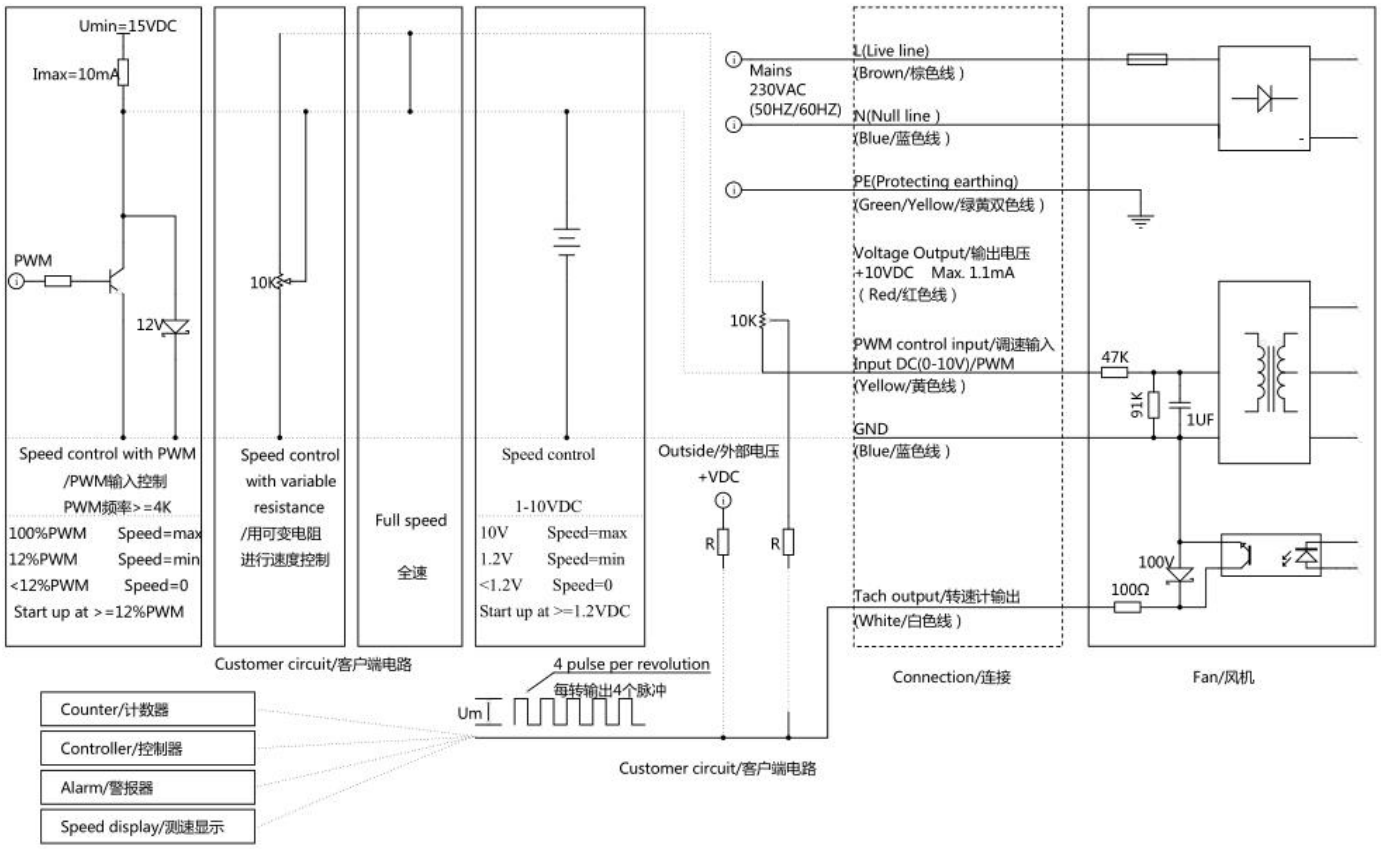

R ：取值根据客户信号电流大小而定（建议用+10VDC 分压得到+5VDC 使用，R 取为 1KΩ），或者使用时接直流电源 $V_{outside+}$ （+VDC）。

1. 电源正(棕色线)负极(蓝色线)正确连接交流电源，黄绿双色线接地。
2. 风机具有调速功能，如需要调速，可进行无级调速，可以通过红色+10VDC 电压输出进行分压调速，如风机只需满速运行，直接将红色电压输出线与黄色调速线直接相连。
3. FG 信号输出为开路输出，如果需要方波输出，可用红色+10VDC 电压进行上来，也可以通过外接电源进行上拉，可获得需要幅值的方波信号，从而获取风机转速信号。

R: The value depends on the signal current of the customer. You are advised to use the +10VDC partial voltage to obtain +5VDC, and R is 1 kω. The value can also be connected to the DC power supply Voutside+ (+VDC).

1. The positive (brown) and negative (blue) wires of the power supply are connected to the AC power supply, and the yellow and green cables are grounded.

2. The fan has the function of speed regulation. If the fan needs speed regulation, it can be adjusted stepless. The red +10VDC voltage output can be used to regulate the fan by voltage division.

3.FG signal output is open circuit output. If square wave output is required, it can be carried out by red +10VDC voltage, or pulled up by external power supply to obtain square wave signal with required amplitude, so as to obtain fan speed signal.

Note:

1. Please read the Technical Specification carefully before using the product.
2. This product is for indoor use only. Shall not be used outdoors or in connection with outdoors without any protection.
3. The motor and fan must be used within the specified temperature and humidity range, otherwise unpredictable damage may be caused.
4. Be sure to use the correct voltage indicated by the nameplate to access the product, otherwise the fan will be damaged.
5. The fan yellow-green two-color line must be effectively grounded to power operation, high voltage danger, to prevent ungrounded and lead to electric shock or affect the operation.
6. The red, blue, yellow and white lines of the motor control line are not allowed to access the high-voltage power supply to prevent burning the motor
7. Do not connect the white signal cable to the AC power supply. An external pull-up resistor is required to obtain the output of the square wave speed signal. Red output DC voltage is 10±1.5VDC, 10V isolated weak output, the maximum 30mA@10V, do not exceed the tolerance range, otherwise the motor may not work normally.
8. If the motor does not run after power-on, the speed regulating voltage may not be connected properly. Do not contact the rotating part of the motor to debug the speed regulating power under the AC main power supply to prevent the motor from suddenly starting and injuring hands or causing other personal injuries.
9. It is strictly prohibited to install the product while the fan is running. Do not directly insert/remove the power lead.
10. When moving the product, the fan blade shall not be the force point. Otherwise, it will cause fan blade deformation and lead to excessive vibration when the fan is running.
11. Please do not disassemble the fan independently, otherwise it will affect the balance of the fan blade, waterproof and other effects, and even cause safety problems.
12. After the fan is powered on, do not use hands or objects near the rotating parts to prevent personal injury.
13. The fan with wind deflector should be designed and installed in accordance with the recommended size, otherwise the product performance will be affected.
14. The fan should be installed in a place where children cannot touch the fan blades and live parts, and children are not allowed to use the product alone.
15. Our company has the right of final interpretation of this specification.