G1G170-AB31-03

EC centrifugal fan

backward curved, single inlet

with housing (flange), Gas blower for gas-condensing heating



ebm-papst Mulfingen GmbH & Co. KG
Bachmühle 2 · D-74673 Mulfingen
Phone +49 7938 81-0
Fax +49 7938 81-110
info1@de.ebmpapst.com
www.ebmpapst.com

Limited partnership · Headquarters Mulfingen
County court Stuttgart · HRA 590344

General partner Elektrobau Mulfingen GmbH · Headquarters Mulfingen
County court Stuttgart · HRB 590142

ErP2015 EXCEEDS THE NORM

Nominal data

Type	**G1G170-AB31-03**	
Motor	**M1G074-CF**	
Phase		1~
Nominal voltage	VAC	230
Frequency	Hz	50
Type of data definition		fa
Speed (rpm)	min^{-1}	5650
Power input	W	315
Current draw	A	2.15
Min. ambient temperature	°C	-25
Max. ambient temperature	°C	55

ml = Max. load · me = Max. efficiency · fa = Running at free air · cs = Customer specs · cu = Customer unit
Subject to alterations

Data according to ErP directive

		Actual	Request 2015
01 Overall efficiency η_{es}	%	61.3	44.9
02 Measurement category		A	
03 Efficiency category		Static	
04 Efficiency grade N		77.4	61
05 Variable speed drive		Yes	

09 Power input P_{ed}	kW	0.29
09 Air flow q_v	m^3/h	370
09 Pressure increase p_{fs}	Pa	1601
10 Speed (rpm) n	min^{-1}	5960
11 Specific ratio*		1.02

Data definition with optimum efficiency.
The ErP data is determined using a motor-impeller combination in a standardised measurement configuration.

* Specific ratio = 1 + p_{fs} / 100 000 Pa

LU-48240

EC centrifugal fan

backward curved, single inlet

with housing (flange), Gas blower for gas-condensing heating

Technical features

Mass	4.5 kg
Size	170 mm
Surface of rotor	Coated in black
Material of protective cover	Polyflam RPP 374-ND CS1 (UL 97-V0)
Material of impeller	Aluminium sheet
Housing material	Die-cast aluminium
Direction of rotation	Clockwise, seen on rotor
Type of protection	IP 20
Insulation class	"B"
Max. permissible ambient motor temp. (transp./ storage)	+ 80 °C
Min. permissible ambient motor temp. (transp./storage)	- 40 °C
Mounting position	Any
Cooling bore / aperture	Rotor-side
Premix	If gas is premixed in the blower, a special blower must be used.
Motor bearing	Ball bearing
Technical features	- Tach output - Motor current limit - Emergency operation - PWM control input - Control interface with SELV potential safely disconnected from the mains - Over-temperature protected motor
Touch current acc. IEC 60990 (measuring network Fig. 4, TN system)	<= 3.5 mA
Electrical leads	With plug
Motor protection	Thermal overload protector (TOP) wired internally
Product conforming to standard	CE
Approval	CCC; CSA C22.2 No.113; UL 507; VDE

ebm-papst Mulfingen GmbH & Co. KG · Bachmühle 2 · D-74673 Mulfingen · Phone +49 (0) 7938 81-0 · Fax +49 (0) 7938 81-110 · info1@de.ebmpapst.com · www.ebmpapst.com

EC centrifugal fan

backward curved, single inlet

with housing (flange), Gas blower for gas-condensing heating

Product drawing

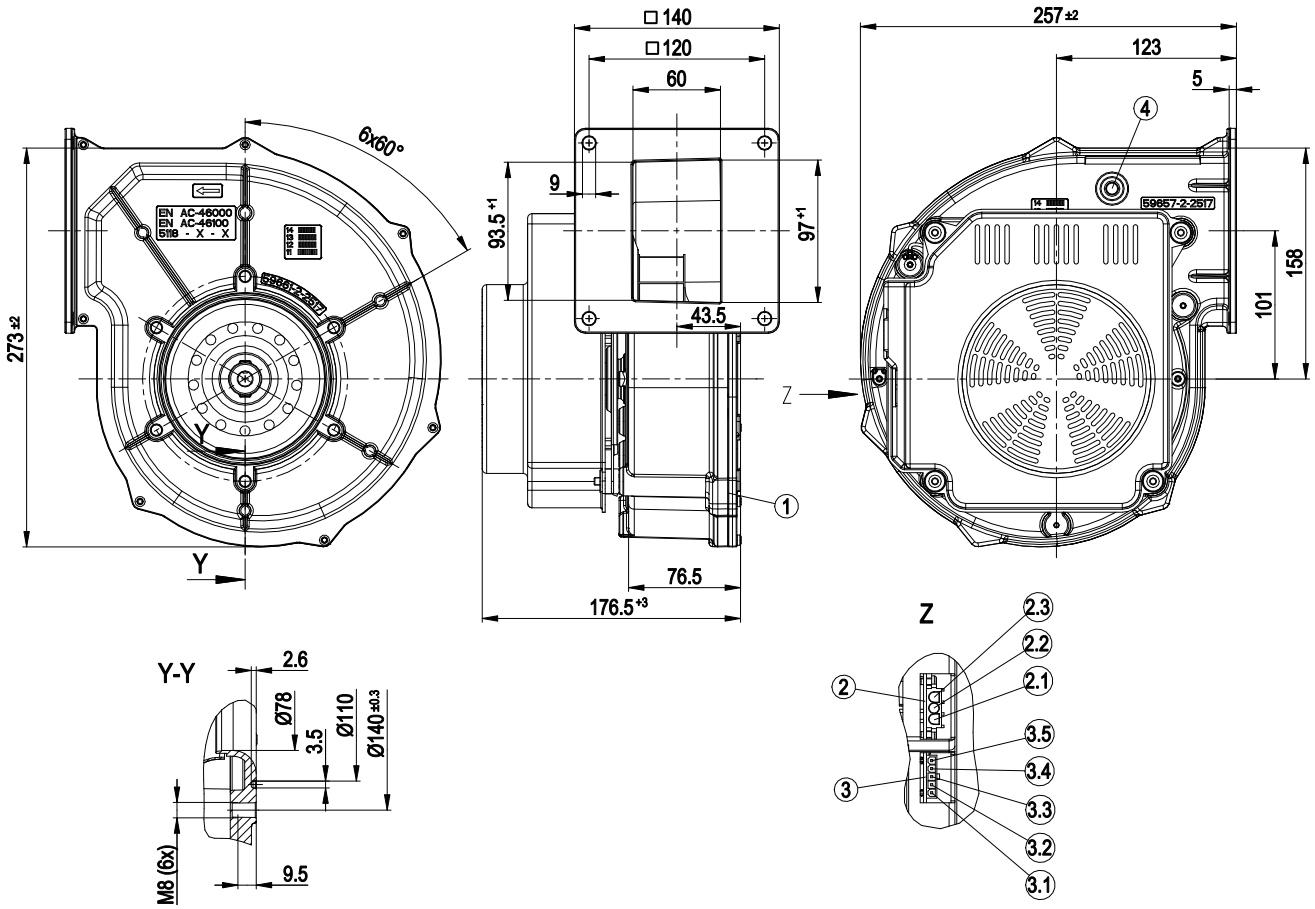

1	Housing side parts sealed with NBR round cord (pentane-resistant)
2	3-pole strip, mating connector (not included in standard scope of delivery): tyco No. 350 766-1; female terminal: tyco No. 926 884-1
2.1	L
2.2	N
2.3	PE
3	5-pole strip; mating connector (not included in standard scope of delivery) Molex No. 39-01-4050, female connector Molex No. 39-00-0059
3.1	(+)
3.2	Speed monitoring
3.3	Not assigned
3.4	PWM input
3.5	(-)
4	Bleeder connection for pressure relief possible

ebm-papst Mulfingen GmbH & Co. KG · Bachmühle 2 · D-74673 Mulfingen · Phone +49 (0) 7938 81-0 · Fax +49 (0) 7938 81-110 · info1@de.ebmpapst.com · www.ebmpapst.com

EC centrifugal fan

backward curved, single inlet

with housing (flange), Gas blower for gas-condensing heating

Connection screen

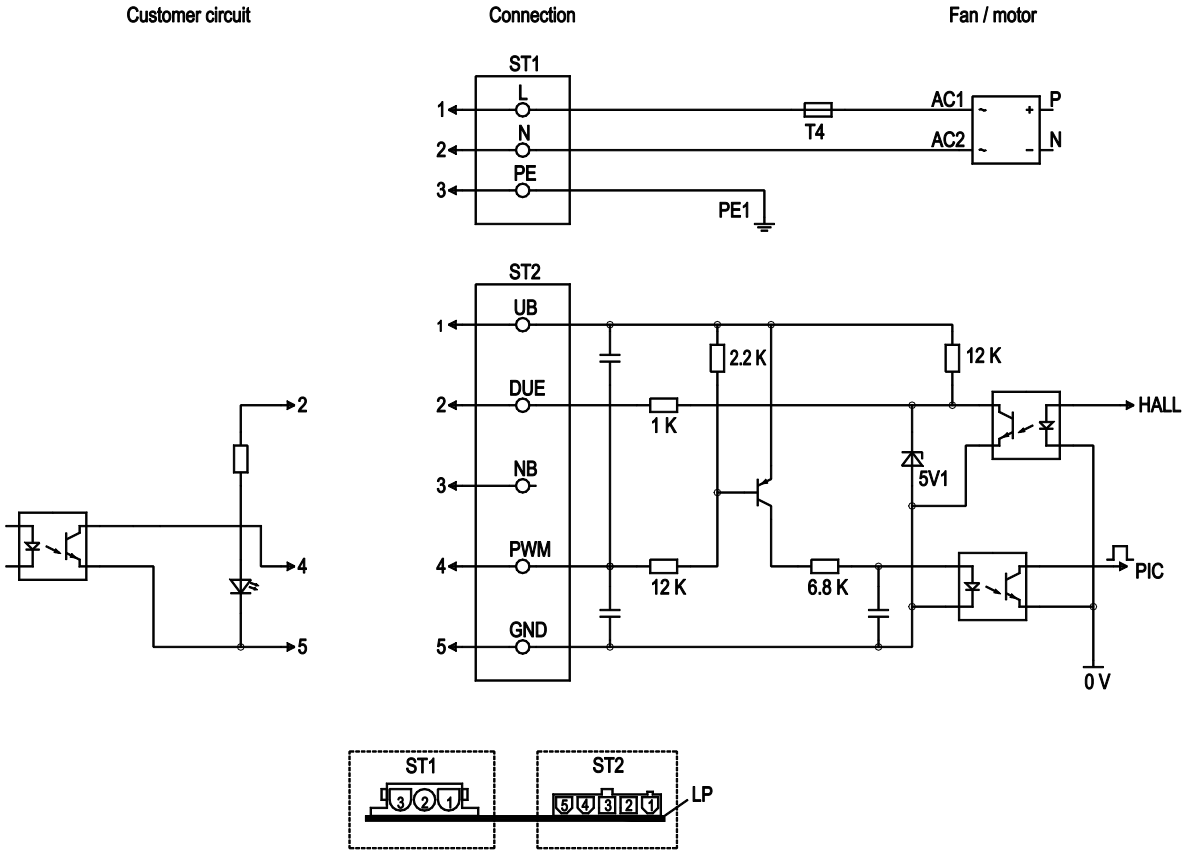

No.	Conn.	Designation	Function / assignment
ST1	1, 2, 3	L, N, PE	Power supply 230 VAC, 50-60Hz, voltage range see rating plate, neutral, protective earth
ST2	1	UB	External voltage 18 - 43 VDC
ST2	2	Tach	Speed monitoring output connection, monitoring circuit output, 3 pulses per revolution, current source 2 mA
ST2	3	N.C.	Not assigned
ST2	4	PWM	PWM - 2 - 6 kHz control input, PWM on n = 100%, PWM low n = 0%
ST2	5	GND	GND - Connection for control interface

ebm-papst Mulfingen GmbH & Co. KG · Bachmühle 2 · D-74673 Mulfingen · Phone +49 (0) 7938 81-0 · Fax +49 (0) 7938 81-110 · info1@de.ebmpapst.com · www.ebmpapst.com

EC centrifugal fan

backward curved, single inlet

with housing (flange), Gas blower for gas-condensing heating

Charts: Air flow 50 Hz

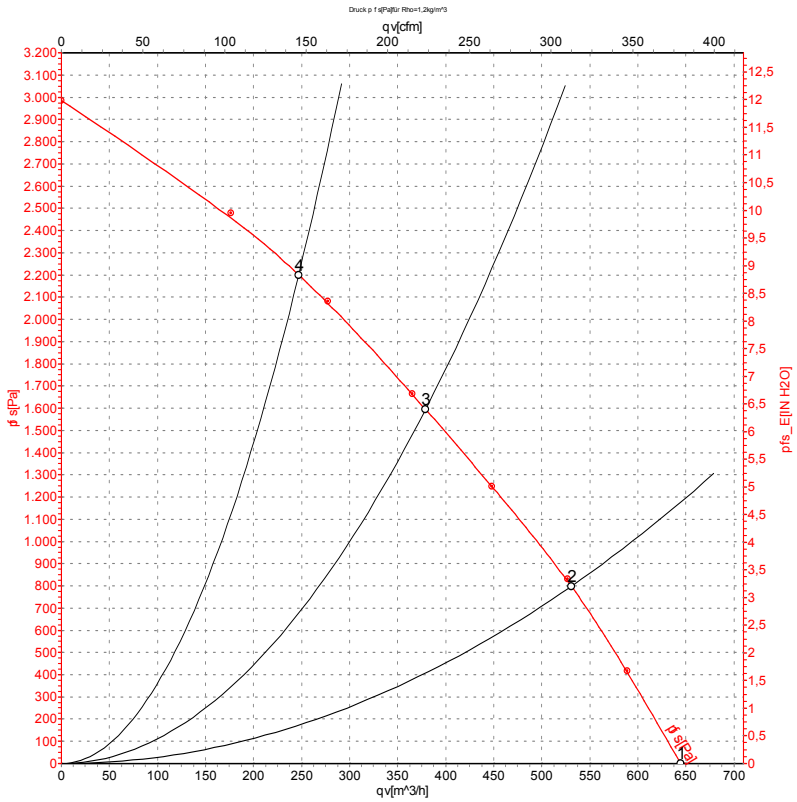

Measurement: LU-48240-1

Air performance measured as per ISO 5801 Installation category A. For detailed information on the measuring set-up, please contact ebm-papst. Suction-side noise levels: LwA measured as per ISO 13347 / LpA measured with 1m distance to fan axis. The values given are valid under the measuring conditions mentioned above and may vary according to the actual installation situation. With any deviation from the standard set-up, the specific values have to be checked and reviewed with the unit installed.

Measured values

	U	f	n	P_{ed}	I	qv	p_{fs}	qv	p_{fs}
	V	Hz	min^{-1}	W	A	m^3/h	Pa	CFM	inH2O
1	230	50	5650	315	2.15	645	0	380	0.00
2	230	50	5740	315	2.15	530	800	315	3.21
3	230	50	5940	300	2.08	380	1600	225	6.42
4	230	50	6215	273	1.88	245	2200	145	8.83

U = Supply voltage · f = Frequency · n = Speed (rpm) · P_{ed} = Power input · I = Current draw · qv = Air flow · p_{fs} = Pressure increase

ebm-papst Mulfingen GmbH & Co. KG · Bachmühle 2 · D-74673 Mulfingen · Phone +49 (0) 7938 81-0 · Fax +49 (0) 7938 81-110 · info1@de.ebmpapst.com · www.ebmpapst.com